FERMILAB
MS 314, P.O. Box 500
Batavia, IL 60510-0500

Mu2e Project DOCDB Document No.
Mu2e-doc-2444-V2

Fermilab./Group or Supplier/Contractor Document No.

TD Engineering Document No.

the
Mu2e
project

Date: 2012-09-28

Estimative of the forces on support structures and other equipments located at the Mu2e experimental hall due to the stray magnetic field (Magnetic Design Version 7)

Abstract

This document summarizes the results for the forces due to the stray magnetic field in some ferromagnetic parts around Mu2e solenoids.

Prepared by :	***Checked by :***	***Approved by :***
G. Gallo M. Lopes G.Moretti		

Circulated to:

History of Changes

Rev. No.	***Date***	***Pages***	***Description of Changes***
V1	09/28/2012	21	Initial release
V2	09/28/2012	21	DocDB number update

Table of Contents

1. INTRODUCTION.....4
2. ESTIMATING THE FORCES DUE TO THE MAGNETIC FIELD.....5
2.1 BLOCKS PLACED ON-AXIS.....6
2.2 BLOCK WITH AVERAGE PROPERTIES 7
2.3 BLOCK OFF-AXIS.....8
2.4 SHIELDING BLOCKS AROUND DS.....9
2.4.1 DS TOP SHIELDING BLOCKS MODELLED WITH 3 BLOCKS 9
2.4.2 DS TOP SHIELDING BLOCKS MODELLED WITH 16 IRON BLOCKS 11
3. PS SUPPORT.....13
4. DS SUPPORT.....16
5. SURVEY OF THE FIELD AT THE EQUIPMENT LOCATION 18
6. CONCLUSIONS.....21
7. REFERENCES 21

1. INTRODUCTION

The surrounds Mu2e solenoids system is populated by several ferromagnetic materials (rebars of the reinforced concrete blocks, pumps, racks, etc.). Due to the unshielded nature of the magnet system, the stray field could represent a potential problem for those components. Figure 1 shows the surrounds of solenoids, some of the components and the experimental hall building [1]. An estimation of the forces due to the magnetic field generated by the coils is then required in order to understand if excessive mechanical solicitations on the iron reinforcements are possible.

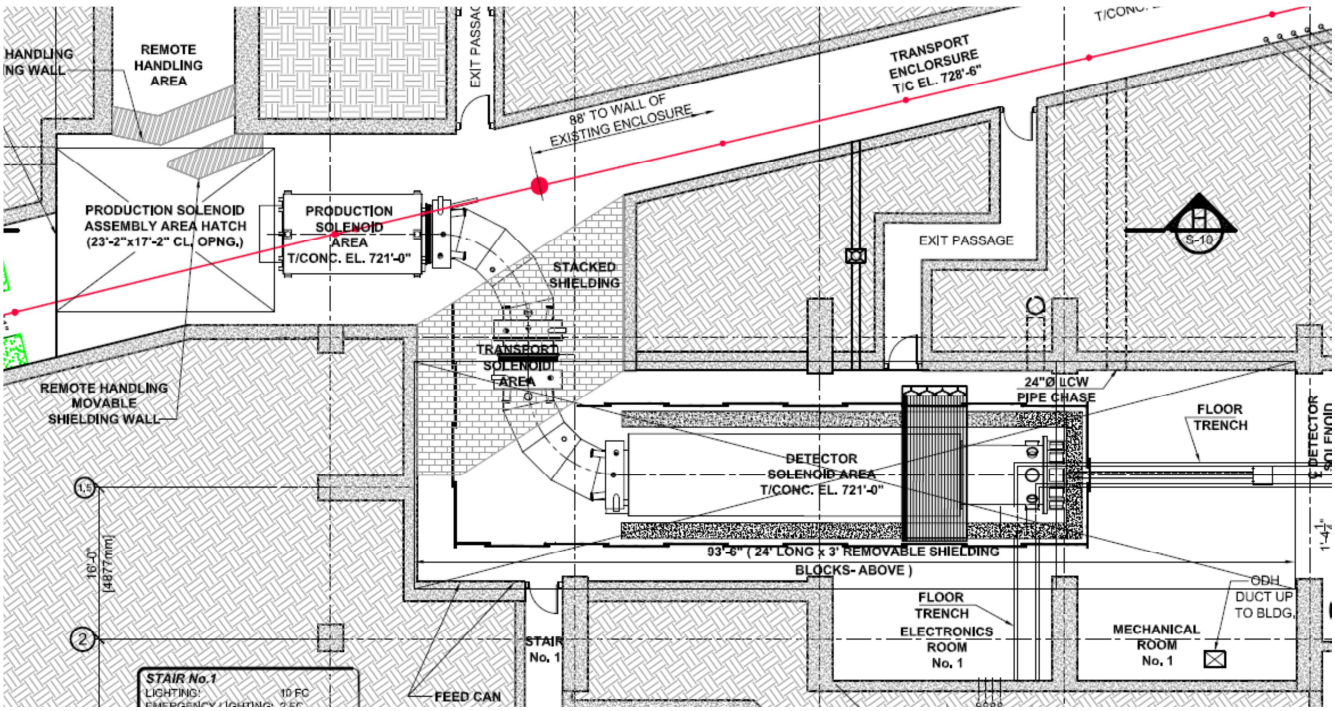

Figure 1 – Mu2e experimental hall

The magnetic field inside the solenoid system reaches a maximum value of about 4.9 T in the Production Solenoid (PS). Outside the solenoids, the field rapidly decreases with the square of the distance. As consequence, moving an iron block in the space around the solenoids, the forces on the block itself can vary of several orders of magnitude.

In order to estimate the intensity of the forces due to the magnetic field outside the solenoids, two types of iron samples have been considered: full iron blocks and wireframes, ideally representing the reinforces of the concrete structure of the walls.

Some indicative positions nearby PS and DS have been considered for the blocks and the wireframes. For each of the simulations, only one solenoid at time (DS or PS) has been considered and imported in the Finite Element Model (FEM), as the field in the immediate vicinity of each solenoid depends primarily on the solenoid itself, the effect of the other two sets can, for this purpose, be ignored.

The forces on the samples have been calculated by performing a nonlinear FEM simulation of the field, using Opera3D and a standard B-H curve with properties similar to 1010 steel. The forces have been than calculated as the integral of the Maxwell stress tensor on the nodes of the iron material, using a nodal interpolation of the field.

An accurate calculation of Maxwell stresses requires very refined models, with very thin mesh. Such calculation would last very long time. A compromise has been found between the computing time and the accuracy of the results, and for this reason the results of the forces presented here cannot be considered completely reliable for values around a few hundreds of Newtons. These values can be read as a qualitative estimation of the forces as opposed to a quantitative set of results.

2. ESTIMATING THE FORCES DUE TO THE MAGNETIC FIELD

In order to estimate the forces on the elements that populate the surrounds of the Mu2e solenoids, a solid iron block (dimensions $1_x2_x0.5$ m^3) has been placed in different positions on the upstream side of PS. Only the effect of the PS has been considered. The magnetic field profile upstream of PS can be seen in Figure 2.

Although using an iron block in order to estimate the forces simplifies considerably the FEM, it is not an accurate representation of the iron content in a concrete block for example. Therefore, a wire-frame block was also modelled and forces were calculated. Figure 3 shows the iron block and wire-frame models.

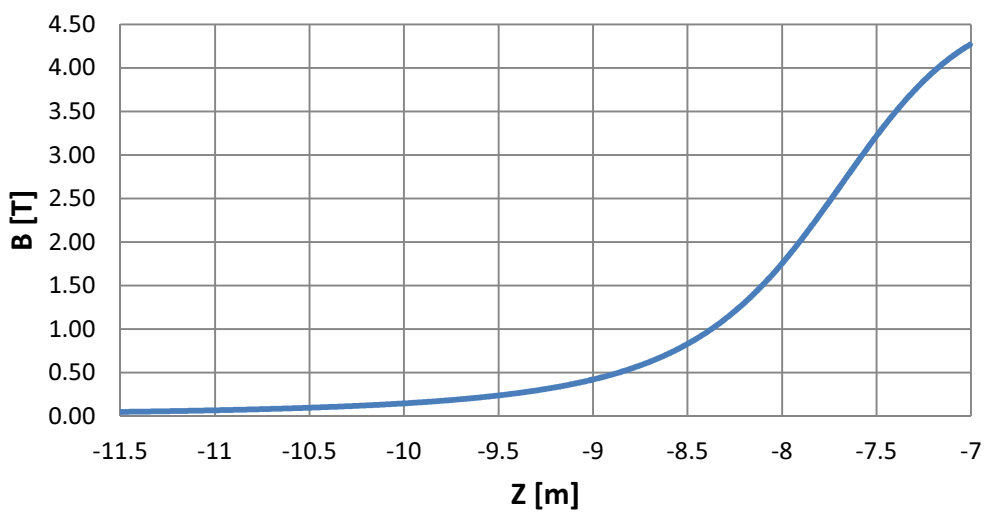

Figure 2 – Magnetic field profile upstream of PS

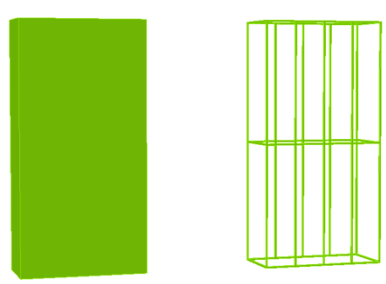

Figure 3 – Solid Iron block (left) and a wire-frame structure (right)

2.1 BLOCKS PLACED ON-AXIS

In this example, the iron block was placed on the axis of the PS. Figure 4 shows, schematically, the position of the components used in the simulations. Table 1 summarizes the position of the blocks and the results of the magnetic field calculations at those locations.

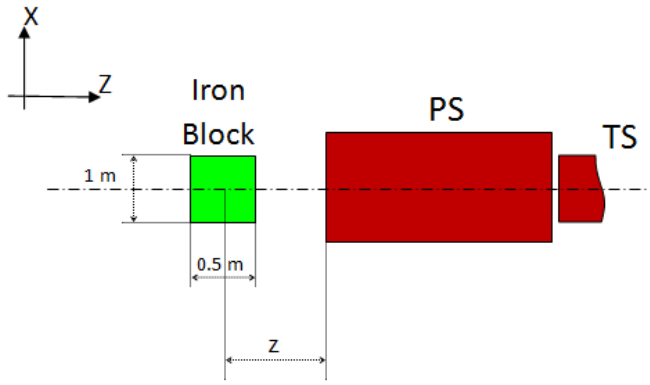

Figure 4 - Position of the block with respect to the PS

Table 1 - Block positions and the correspondent magnetic field

Distance from PS Upstream end (m)	Mu2e Coordinate system		Magnetic field at the block location (T)		
	X (m)	Z(m)	w/o block	Iron block	Wire-frame
1	3.904	-8.5	0.83	1.68	0.83
3	3.904	-10.5	0.10	0.15	0.10

As expected, the only component of the force on the block is the F_Z component, while F_X and F_Y are equal to 0 for symmetry reasons. F_Z is always positive as the block is attracted by the solenoid. Table 2 summarizes the force calculation results.

Table 2 – Forces on the blocks

Distance from PS Upstream end (m)	Axial (Fz) force on the blocks (kN)	
	Iron Block	Wire-frame
1	1300	4.0
3	11.4	0.1

2.2 BLOCK WITH AVERAGE PROPERTIES

The simulation of a wire-frame is time-consuming, and it is computing intensive demanding. One way to simplify the model and get similar results of the wireframe is by using a solid block with a B-H curve that is the weighted average between the B-H curve for air and the one for iron, using as initial weights the volume percentage of each of the two substances in the block. The B-H curve for the new equivalent block can be written as

$$B(H) = p \cdot B_{iron}(H) + (1-p) \cdot B_{air}(H)$$

The wireframe of the previous examples may be represented as a $1_x 2_x 0.5$ m^3 block with a percentage *p* of iron equal to 0.485%. Using this concept , FEM simulations were carried out at the same locations described in the previous sections. The axial force in each case is:

$F_Z \simeq 8200$ N with the block locate at 1 m away from PS

$F_Z \simeq 550$ N with the block locate at 3 m away from PS

Comparing these values with the ones obtained in the previous sections one can see that the values have the same order of magnitude but the absolute values are off by a factor of 2. The percentage *p* was chosen based only on the content of iron in a wire-frame geometry. However the field is not constant across the block, therefore the forces can be substantially lower due to these differences in the field. The percentage *p* can be modified to match the values of the wire-frame simulations. The same calculations were repeated with *p* = 0.2 %:

$F_Z \simeq 3300$ N with the block locate at 1 m away from PS

$F_Z \simeq 230$ N with the block locate at 3 m away from PS

This shows that the values of forces are proportional to the iron content (*p*) and the behaviour of the forces is linear with *p*, a result that comes direct from the fact that the volume of iron (non-linear material) is small; therefore, the B-H curve associate with the block is practically linear. This technique can be used to estimate forces on wall or concrete blocks without having the complexity of modelling all the iron rebars present.

2.3 BLOCK OFF-AXIS

Simulations with the block off-axis were also done. Figure 5 shows, schematically, the new position for the block. Again, the simulations were done using solid blocks and wire-frame, as well as the block with average properties. The magnetic field at the block locations is summarized in Table 3. The forces are summarized in Table 4

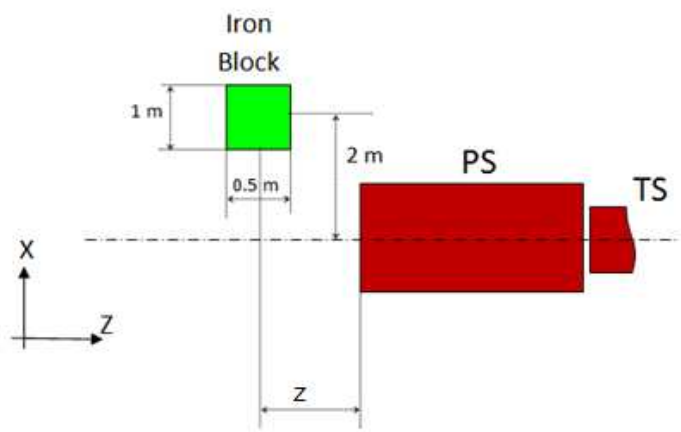

Figure 5 - Position of the block with respect to the PS

Table 3 - Block positions and the correspondent magnetic field

Distance from PS Upstream end (m)	Mu2e Coordinate system		Magnetic field at the block location (T)		
	X (m)	Z(m)	w/o block	Iron Block	Wire-frame
1	5.904	-8.5	0.20	0.35	0.20
3	5.904	-10.5	0.06	0.19	0.06

Table 4 – Forces on the blocks

Distance from PS Upstream end (m)	Fx component of the force on the blocks (kN)			
	Iron Block	Wire-frame	Average	Average mod
1	-68.0	-0.4	-1.4	-0.6
3	-3.3	~0	~0	~0

Distance from PS Upstream end (m)	Fz component of the force on the blocks (kN)			
	Iron Block	Wire-frame	Average	Average mod
1	13.4	0.1	0.7	0.3
3	3.8	~0	~0	~0

2.4 SHIELDING BLOCKS AROUND DS

The shielding blocks around the Detector Solenoid (DS) is represented in the technical drawing [2] and in Figure 6. The structure is made by several reinforced concrete blocks, similar to the wire-frames studied in the previous section. The top part of the shielding blocks is composed by 16 blocks. The whole layout of DS support is described in [3].

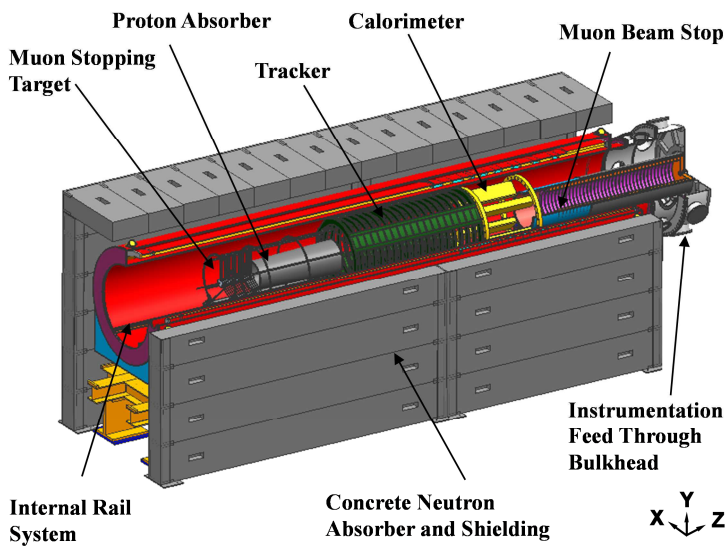

Figure 6 – DS components

2.4.1 DS TOP SHIELDING BLOCKS MODELLED WITH 3 BLOCKS

Since the simulation of the whole structure would be long and complicated, initially just three blocks (located according Figure 7) were included in the FEM simulation in order to simplify the model.

Two distinct sets of simulations were done: one aproximating the three modules as solid iron blocks (this gives an overestimation of the real forces in the structure) and the other considering three wireframes in the specified positions (Figure 8 show the geometry of the DS shield blocks rebars according to [4]) . In the standard Mu2e coordinate system the three blocks have the center settled at X=-3.904 m and Y = 1.860 m.

Each block has the following dimensions:

4.05 m in X direction,
0.46 m in Y direction,
0.92 m in Z direction.

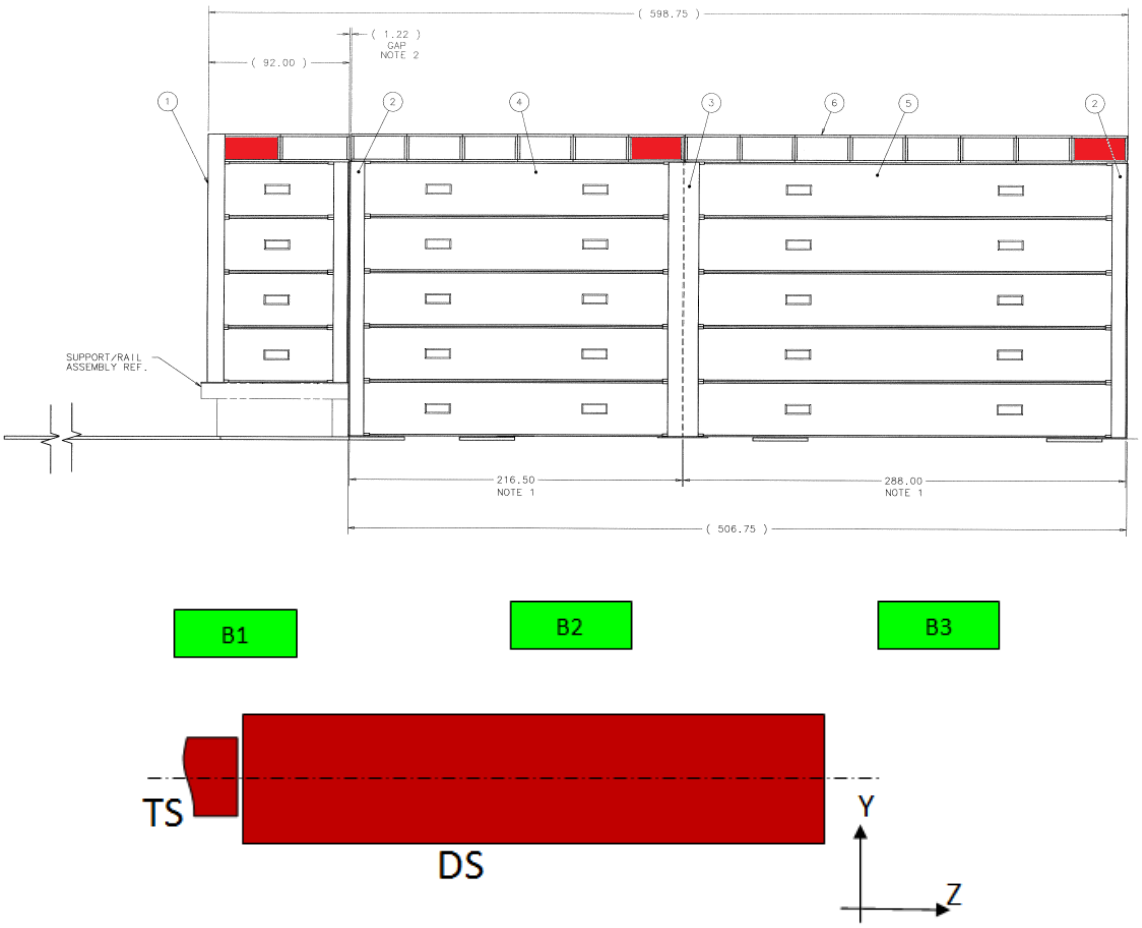

Figure 7 - DS shield blocks with 3 significant blocks emphasized in red (top); the same blocks schematically shown in green alongside with the DS magnet (bottom).

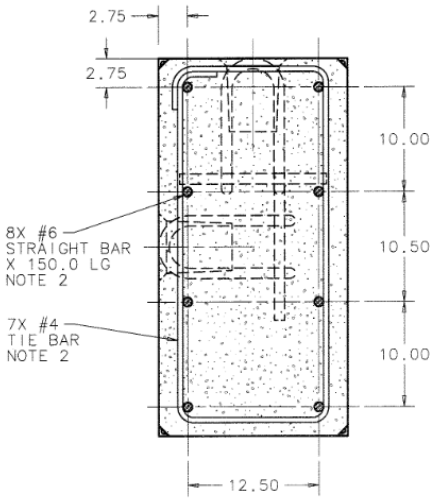

Figure 8 - Transversal section of the wireframe (measures in inches)

Table 5 summarizes the results of the forces calculation on these 3 blocks.The percentage of iron in these blocks is p = 1.32%. Simulations of solid block with average material properties were carried out. The results shows that the average properties have to be modified to a percentage p = 0.33%, in order to obtain values consistent with the wire-frame.

Table 5 – Forces on the blocks

Fy componenent of the force (kN)					
Block #	**Z (m)**	**solid block**	**wire-frame**	**average**	**average mod**
1	3.06	-77.0	-1.2	-4.8	-1.2
2	10.39	0.0	0.0	0.0	0.0
3	16.80	-0.7	-0.4	-0.2	-0.1

Fz componenent of the force (kN)					
Block #	**Z (m)**	**solid block**	**wire-frame**	**average**	**average mod**
1	3.06	9.0	0.4	1.4	0.4
2	10.39	0.3	0.0	0.2	0.1
3	16.80	-1.0	-0.1	-0.3	-0.1

2.4.2 DS TOP SHIELDING BLOCKS MODELLED WITH 16 IRON BLOCKS

In the previous section, only 3 blocks of the structure have been considered. In this section, all the 16 blocks are present in the simulation. Since the modelling of all the rebars is very complicated and computing intensive, the calculations were done using only solid blocks. Initially the solid blocks were considered to be made of iron. Blocks with average properties were considered (1.32 and 0.33%). The results are presented in Table 6. From such a model it is possible to get an estimation of the load of the ceiling of the shielding blocks.

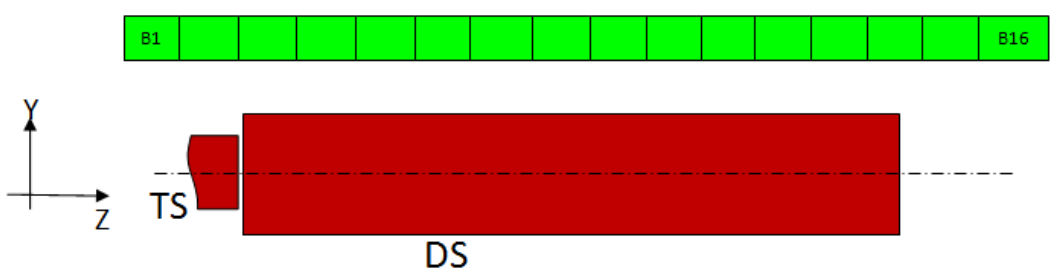

Figure 9 - Position of the blocks with respect to the DS

Table 6 – Forces on the blocks

Block #	Iron Blocks		Average properties		Mod Average	
	Fy (kN)	Fz (kN)	Fy (kN)	Fz (kN)	Fy (kN)	Fz (kN)
1	-142.5	272.7	-5.0	1.5	-1.2	0.4
2	-89.0	464.0	-5.4	-0.9	-1.4	-0.4
3	-2.3	-76.0	-1.8	-1.5	-0.5	-0.4
4	-9.6	-225.2	-1.1	-1.0	-0.3	-0.2
5	-12.6	-193.9	-1.2	-0.8	-0.3	-0.1
6	-8.9	-112.4	-1.2	-0.6	-0.3	-0.2
7	-0.7	-21.3	0.1	-0.2	0.0	-0.1
8	0.0	-0.2	0.1	0.3	0.0	0.0
9	0.1	11.4	0.0	0.3	0.0	0.1
10	0.2	11.3	-0.1	0.3	0.0	0.1
11	-0.2	0.6	-0.3	0.6	-0.1	0.2
12	-12.9	-67.0	-1.9	1.0	-0.5	0.4
13	-52.7	-70.7	-3.8	-0.4	-0.9	-0.1
14	-13.7	13.2	-1.7	-0.7	-0.4	-0.3
15	-1.1	1.4	-0.5	-0.4	-0.1	-0.2
16	1.3	-13.6	0.0	-0.6	0.0	-0.1
Total	**-340.0**	**-6.0**	**-23.8**	**-3.0**	**-5.9**	**-0.8**

Due to the nature of the problem, it is expected that the Fy component of the force to be negative. The Fz component is more complicated to visualize, simply because the fringe field of the magnet is influenced by the blocks' iron contents. In any case, one must look for the total force in each direction.

In Table 6 blocks 1, 9 and 16 are the ones used in the previous section. As can be seen, the forces from a solid block are 2 times higher when comparing with the previous results. This comes from the fact that the neighbor iron blocks amplifies the field in the block in question resulting in higher forces. However when one compares the results of the previous wire-frame calculations with the modified average property ones, one can see that the results are very similar.

3. PS SUPPORT

The PS support is being considered to be made of iron. Figure 10 shows the specifics of the PS support and its relative position with respect to the solenoid (according to [5]). The PS is the solenoid with the highest field. It is important to estimate the forces on the support structure and also the perturbation of the field on the axis of PS, if it exists. Figure 11 shows the FEM model used in these simulations.

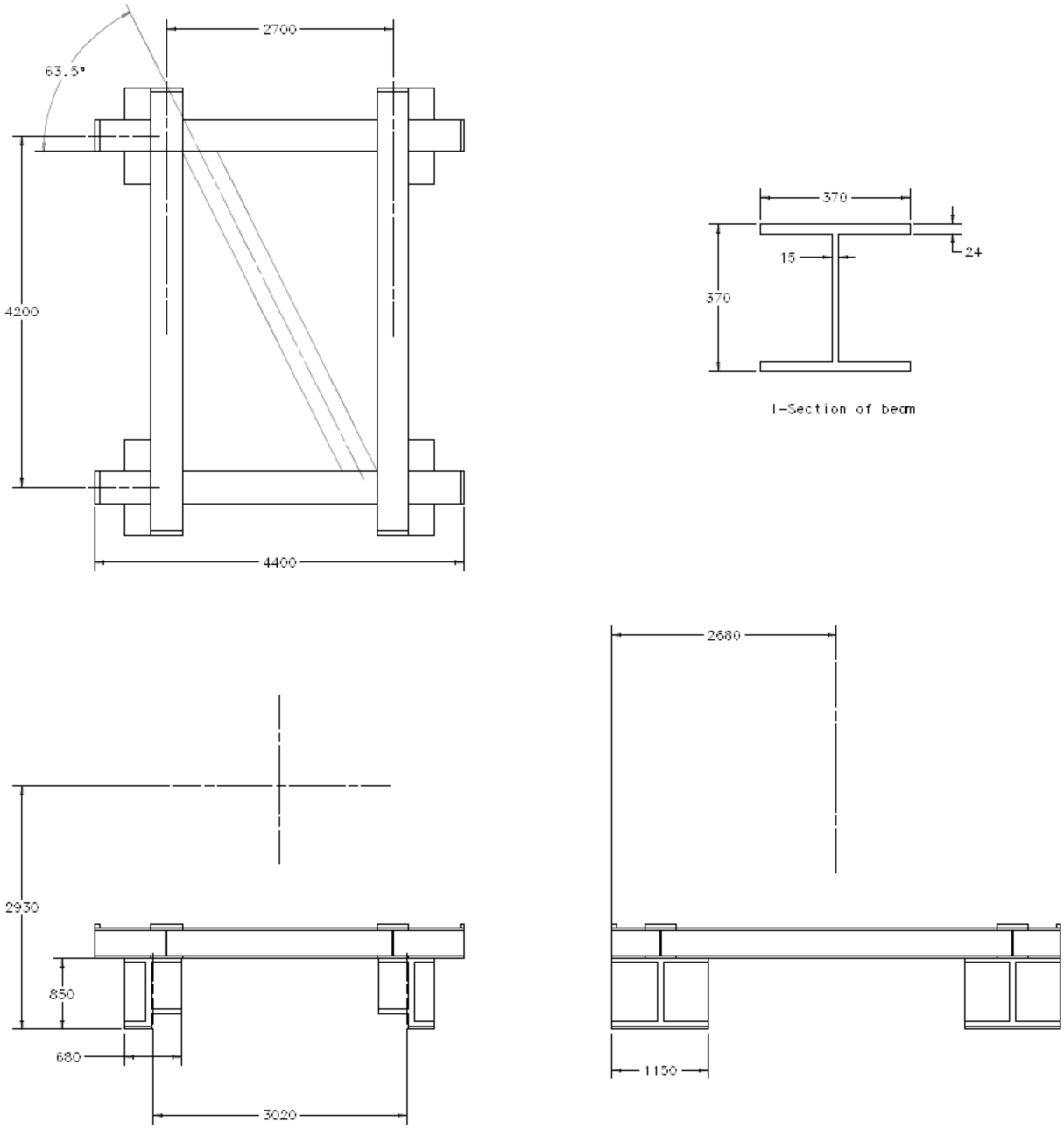

Figure 10 – PS support specifications

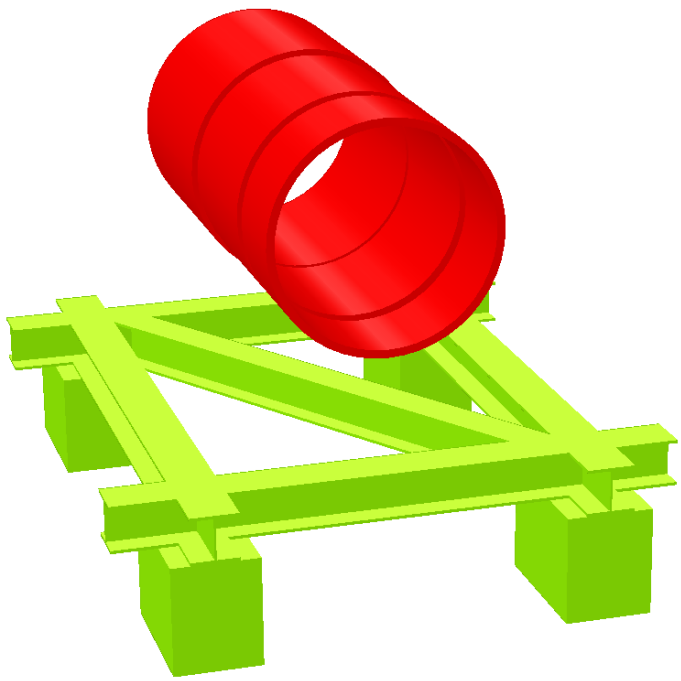

Figure 11 – PS support and coils

At the present design stage, the vertical distance from the center of PS to the beginning of the support structure is 1.71 m. Due to the asymmetry of the support and also due to the gradient of PS, forces in all three directions will appear. The simulation was repeated with the central diagonal beam reversed. Simulations with the support structure 1 and 2 feet closer to the PS coils were also done, so one can have a "rule of thumb" to estimate the forces on the support structure with the distance from the PS coils (since this distance is not yet fixed).

Figure 12 and Figure 13 show the difference of the field in the PS when the support is present in relation to the nominal field (on-axis and off-axis). Table 7 summarizes the forces on the PS support structure in the scenarios discussed before.

Table 7 – Forces on the PS support structure.

	Regular	**Reversed beam**	**1 ft up**	**2 ft up**
Fx (kN)	1.7	-1.4	3.3	6.0
Fy (kN)	114.0	113.0	179.4	324.0
Fz (kN)	-0.7	-1.0	1.0	6.4

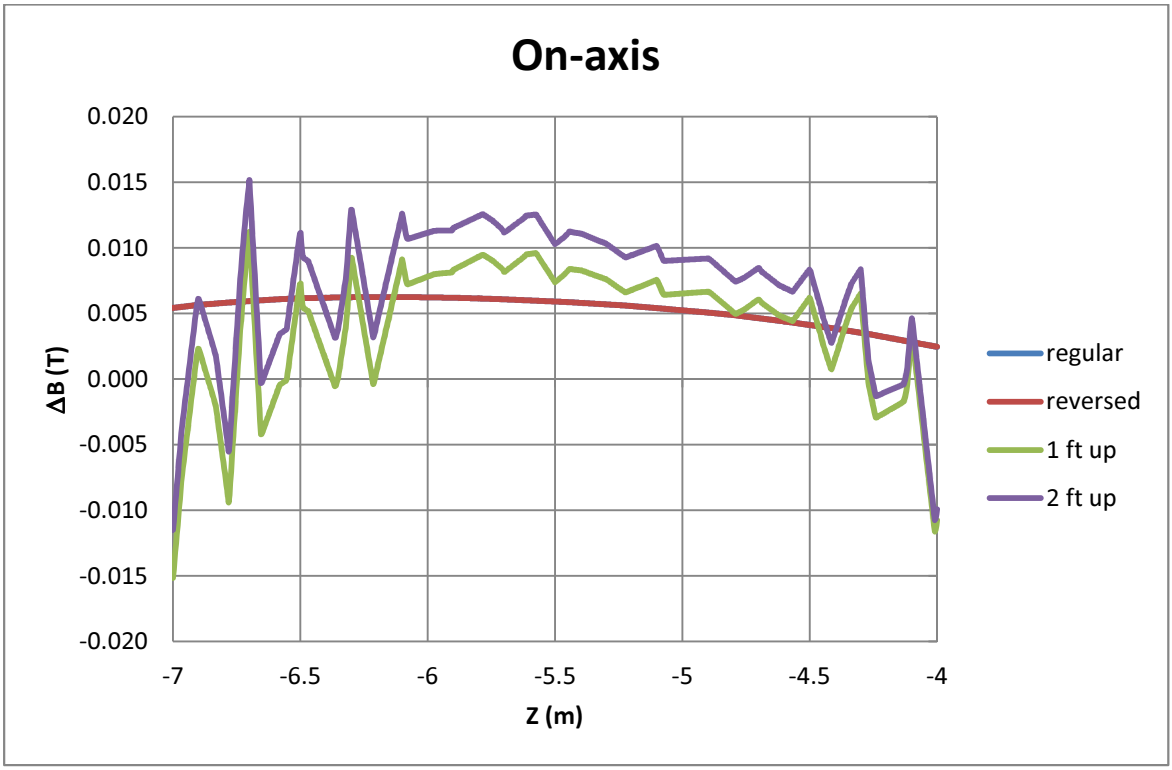

Figure 12 – Difference of the field with the support in relation to the nominal field (on-axis)

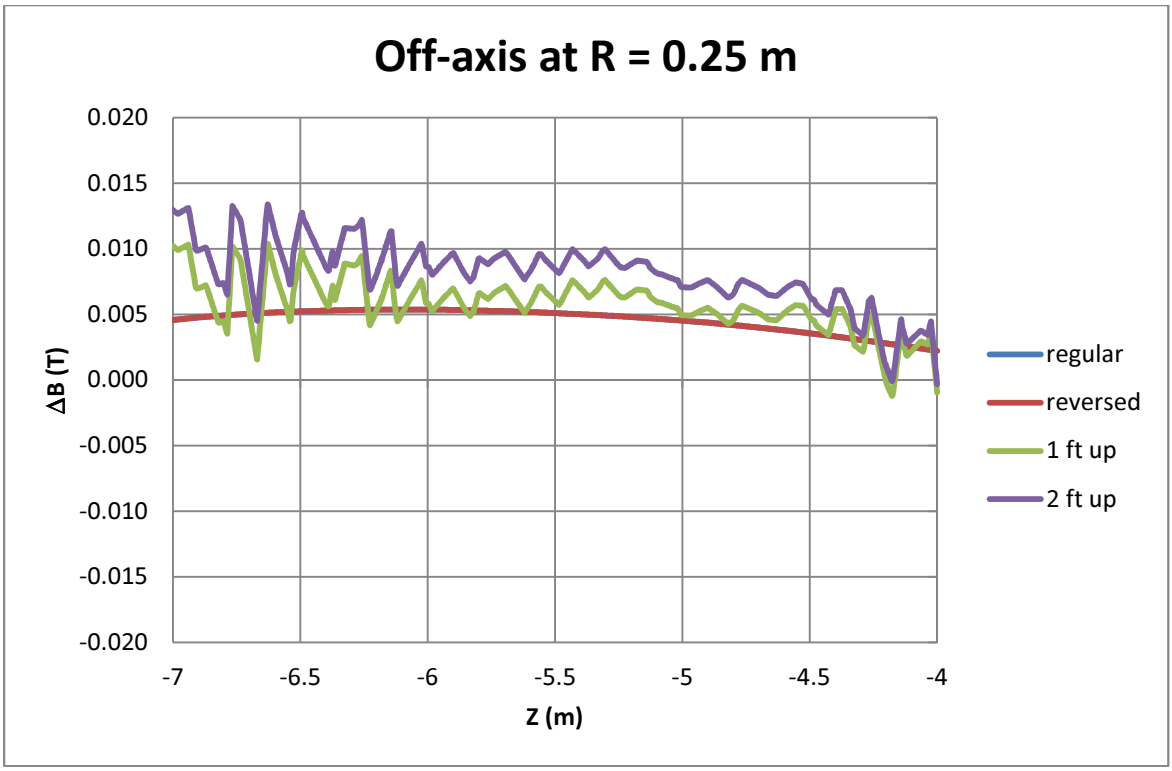

Figure 13 – Difference of the field with the support in relation to the nominal field (off-axis at R = 0.25 m)

4. DS SUPPORT

The support structure for the DS has it specifications shown in Figure 14 (see also [5] for the relative position of the coils). Figure 15 shows the DS support and the coils. Unlike the PS support, the DS support does not have the diagonal beam, making this a symmetric support, therefore the Fx component of the force is zero.

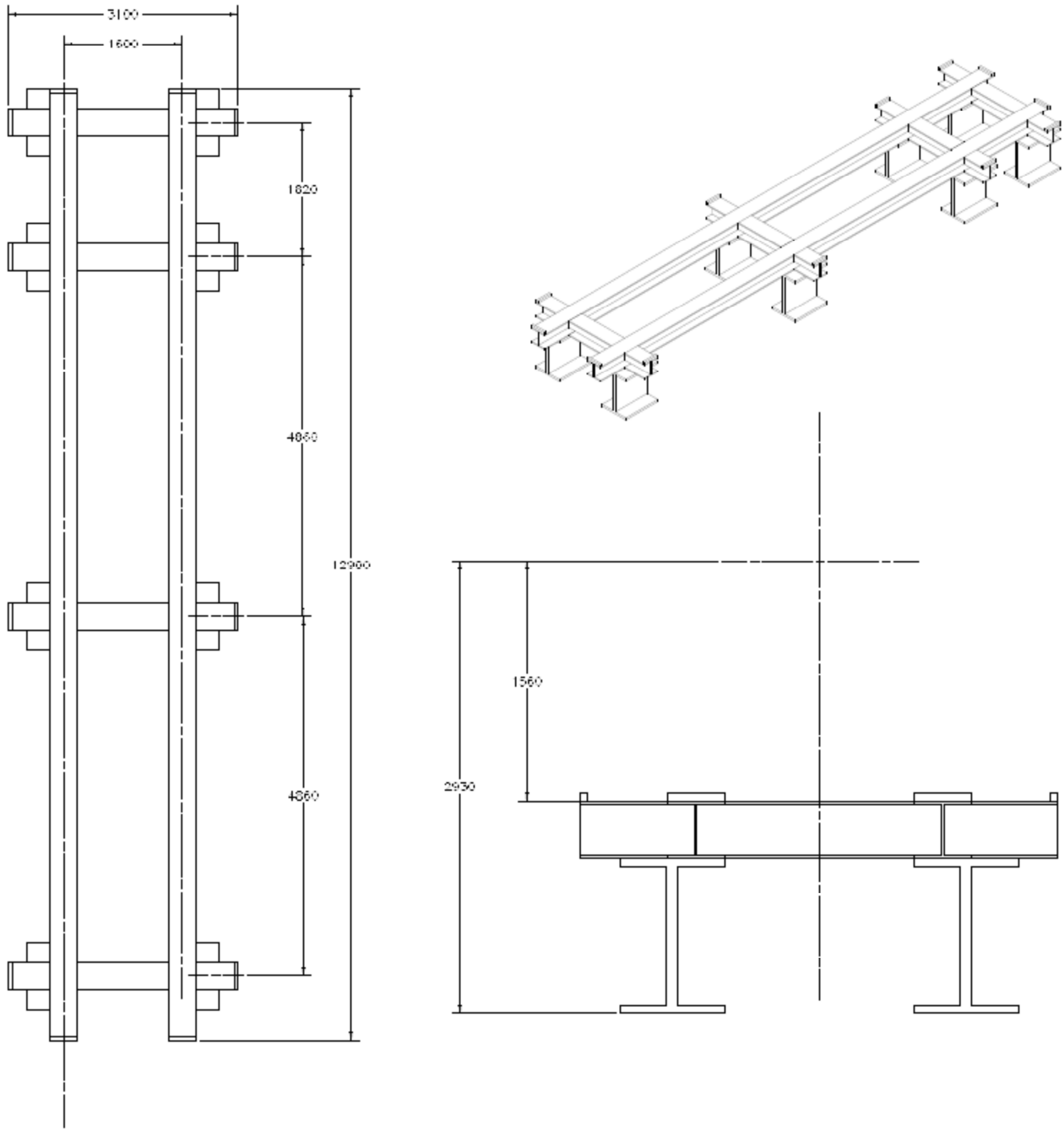

Figure 14 – DS support specifications

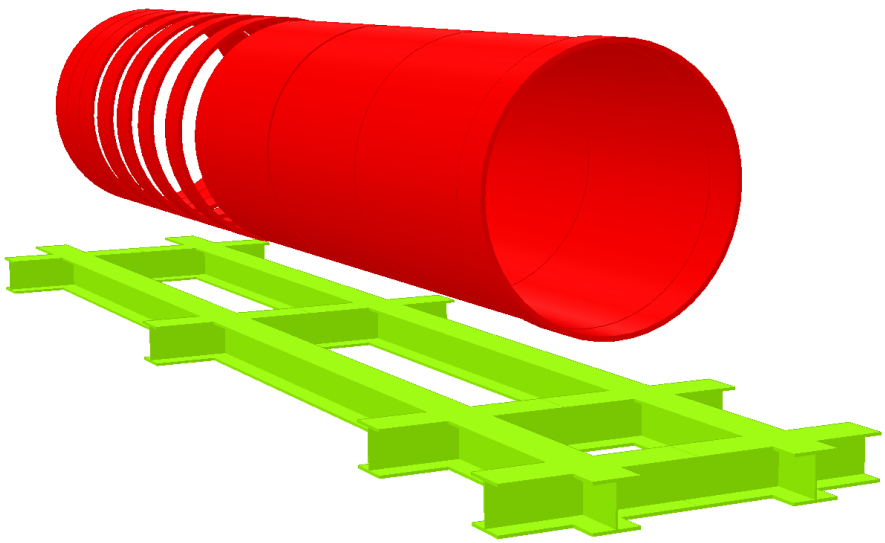

Figure 15 – DS support and coils

The total forces on the support are:

Fx =	0 kN
Fy =	39.9 kN
Fz =	0.3 kN

The impact on the field is negligible.

5. SURVEY OF THE FIELD AT THE EQUIPMENT LOCATION

The surrounds of the Mu2e magnet system is populated by different kinds of equipment [1]. An extensive (perhaps not complete) list was compiled is presented in Table 8.

Table 8 – List of equipment around the mu2e magnet system.

Section	Item #	Name	Description	Materrial	Position (mm)			Dimensions (mm)		
					X	Y	Z	X	Y	Z
3. SOLENOID AND POWER SUPPLY ROOM	1	(10) Rack "WORST"	-	iron-copper	-14500	4850	3100	1000	2000	1000
	2	PLATFORM Feed Boxes	is a support basement	iron	-11200	4850	-1800	3800	50	4100
	3	Agilent Turbo V-2300	is a molecolar pump	stainless steel	-11400	4850	-3300	330	304	330
	4	Agilent Turbo V-2300	is a molecolar pump	stainless steel	-11400	4850	-2300	330	304	330
	5	Agilent Turbo V-2300	is a molecolar pump	stainless steel	-11400	4850	-1300	330	304	330
	6	Agilent Turbo V-2300	is a molecolar pump	stainless steel	-11400	4850	-300	330	304	330
4. Control Room	7	Rack	-	iron-copper	-13000	4850	11600	3600	1800	935
	8	Rack	-	iron-copper	-13000	4850	13700	3600	1800	935
	9	Rack	-	iron-copper	-13000	4850	15800	3600	1800	935
5. MECHANICAL ROOM (LOW-BAY)	10	CTI-9600	is a compressor	iron	-9670	-2425	13100	546	674	496
	11	CTI-9600	is a compressor	iron	-9710	-2425	13770	546	674	496
	12	CTI-9600	is a compressor	iron	-9750	-2425	14480	546	674	496
	13	Kinney SDV-800	is a vacuum pump	iron	-10000	-2440	11270	965	1727	1085
	14	Edward GVSP-30	is a scroll pump	stainless steel	-10000	-2440	12400	288	443	288
	15	Edward GVSP-30	is a scroll pump	stainless steel	-10000	-2440	15000	288	443	288
	16	Shimadzu TMP-1003	is a turbo molecular pump	stainless steel	-8600	0	10600	570	510	510
6-7-8. Building Mechanical Area (HIGH-BAY)	17	Heat Exchanger	-	iron	-14500	4850	19500	3000	1000	1000
	18	Main Pump	is cooling pump	iron	-11400	4850	19800	570	510	510
	19	Backup pump	is cooling pump	iron	-12400	4850	19800	570	510	510
9. Electrical ROOM (LOW-BAY)	20	(4) LV Board Agilent	is the electrical connections hou	iron - copper	-7200	0	17700	800	300	800
	21	(2) LV crate (Caen-VME 9U)	is the electrical connections hou	iron - copper	-7200	0	17700	800	300	800
	22	(1) HV Crate	is the electrical connections hou	iron - copper	-7200	0	17700	800	300	800
10. Extinction Monitor	23	Alignment Hole Plate I	-	iron	5300	3000	-24700	300	300	300
	24	Alignment Plug I	-	iron	5300	3000	-23700	300	300	2000
	25	Support Table	-	iron	5300	2700	-25600	1500	1500	1000
	26	Secondary Magnet	-	iron	5300	3000	-25600	300	300	500
	27	Alignment Hole Plate II	-	iron	5300	3000	-18200	300	300	300
	28	Alignment Plug II	-	iron	5300	3000	-16500	300	300	2000
	29	Primary Magnet	-	iron	5300	3000	-20700	300	300	3500
11. Remote Handling Area	30	Remote Handling Manipulators	mechanical hand tools	iron	7500	0	-11500	1000	1000	1000
	31	Remote handling Shielding Wall	concrete shielding wall	iron	4000	-1000	-11000	1000	2000	4000
	32	Remote Handling system	mechanical device	iron	6500	0	-10000	3000	1000	3000
	33	Remote Handling movable shielding	concrete shielding wall	iron	7500	0	-11500	1000	2000	3000
14. Transport Solenoid	34	MBL shielding wall - left side of TS	Vertex - A	concrete with rebar	963	0	-3588	0	0	0
	35	MBL shielding wall - left side of TS	Vertex - B	concrete with rebar	2406	0	-1336	0	0	0
	36	MBL shielding wall - left side of TS	Vertex - C	concrete with rebar	-4211	0	-3694	0	0	0
	37	MBL shielding wall - left side of TS	Vertex - D	concrete with rebar	-2272	0	-618	0	0	0
	38	MBL shielding wall - right side of TS	Vertex - A	concrete with rebar	3260	0	50	0	0	0
	39	MBL shielding wall - right side of TS	Vertex - B	concrete with rebar	5173	0	3084	0	0	0
	40	MBL shielding wall - right side of TS	Vertex - C	concrete with rebar	62	0	3084	0	0	0
	41	MBL shielding wall - right side of TS	Vertex - D	concrete with rebar	-1410	0	790	0	0	0
15. Detector Solenoid	42	Pipe Chase room	Vertex - A		-7333	0	-3590	0	0	0
	43	Pipe Chase room	Vertex - B		-9404	0	-3590	0	0	0
	44	Pipe Chase room	Vertex - C		-7333	0	1092	0	0	0
	45	Pipe Chase room	Vertex - D		-9404	0	1092	0	0	0

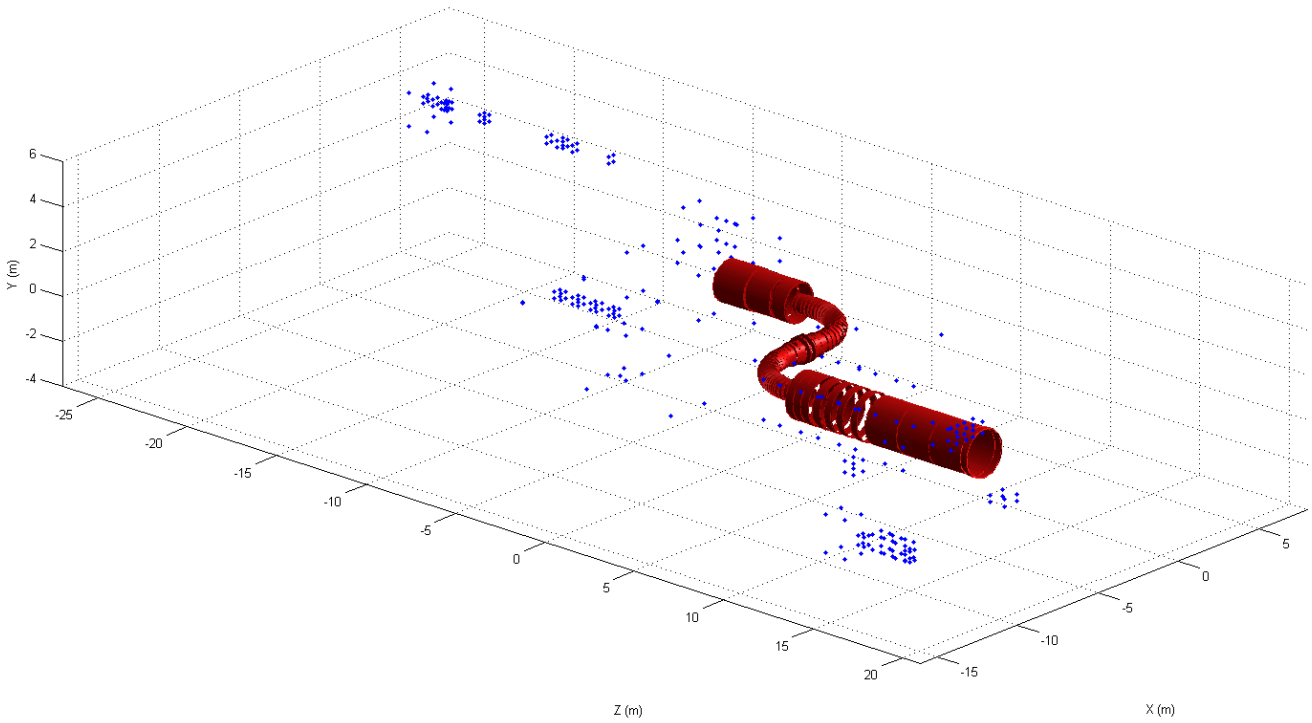

Figure 16 – Location of other equipment around the Mu2e coils.

The magnetic field was computed on the locations presented in Table 8. This values can be used to estimate the forces on the equipment in question by making an anology with what was discussed in section 2.3. With the values of the fields presented on Table 3 and with the forces presented in Table 4 one can easily estimate the forces. Comparing the fields of Table 8 and Table 3, the forces on the equipments listed are relatively low. The only exception in Table 8 is the item #16 (Shimadzu TMP-1003 Turbomolecular Pump). This pump has an operational external field requirement:

Axial field < 30 G
Radial field < 150 G.

Therefore, this pump cannot properly operate at this location.

Table 9 – Magnetic field components for the listed equipment.

Item #	Name	Field (G)			
		B	Bx	By	Bz
1	(10) Rack "WORST"	19	9	-2	-12
2	PLATFORM Feed Boxes	36	25	-5	-1
3	Agilent Turbo V-2300	17	14	-8	-3
4	Agilent Turbo V-2300	19	15	-9	-4
5	Agilent Turbo V-2300	21	17	-10	-5
6	Agilent Turbo V-2300	24	18	-11	-7
7	Rack	46	-14	20	-9
8	Rack	46	-16	22	-5
9	Rack	44	-16	21	7
10	CTI-9600	92	-63	-24	-13
11	CTI-9600	91	-65	-24	-5
12	CTI-9600	90	-63	-24	6
13	Kinney SDV-800	86	-42	-12	-23
14	Edward GVSP-30	77	-59	-22	-20
15	Edward GVSP-30	77	-61	-23	9
16	Shimadzu TMP-1003	111	-80	5	-49
17	Heat Exchanger	23	-12	10	9
18	Main Pump	28	-18	14	13
19	Backup pump	24	-16	11	10
20	(4) LV Board Agilent	159	-68	5	120
21	(2) LV crate (Caen-VME 9U)	159	-68	5	120
22	(1) HV Crate	159	-68	5	120
23	Alignment Hole Plate I	14	-2	-3	13
24	Alignment Plug I	18	-2	-3	18
25	Support Table	13	-1	-1	13
26	Secondary Magnet	12	-1	-2	12
27	Alignment Hole Plate II	43	-6	-13	40
28	Alignment Plug II	80	-8	-16	71
29	Primary Magnet	36	-2	-4	34
30	Remote Handling Manipulators	342	-144	43	211
31	Remote handling Shielding Wall	4054	993	1319	3931
32	Remote Handling system	4616	-147	1500	2866
33	Remote Handling movable shielding	469	-95	130	196
34	MBL shielding wall - left side of TS	711	-706	0	-86
35	MBL shielding wall - left side of TS	735	-349	0	647
36	MBL shielding wall - left side of TS	30	-30	0	5
37	MBL shielding wall - left side of TS	336	-288	0	173
38	MBL shielding wall - right side of TS	305	-260	0	159
39	MBL shielding wall - right side of TS	46	-8	0	46
40	MBL shielding wall - right side of TS	240	-239	0	-10
41	MBL shielding wall - right side of TS	906	-845	0	325
42	Pipe Chase room	23	16	0	17
43	Pipe Chase room	22	21	0	7
44	Pipe Chase room	194	173	0	88
45	Pipe Chase room	76	76	0	2

6. CONCLUSIONS

The forces of several structures were computed. Some approximations (using the averaged properties of the block) were done in order to simplify the highly demanding computations. They seem to present reliable estimation of the forces.

Forces in other locations can be estimate by the field, comparing this value with the forces calculated for other structures.

7. REFERENCES

[1] "Mu2e Conventional facilities. Detector hall – architectural plan", Project no. 6-10-1

[2] G.Gallo, M.Battista, "Mu2e – Magnets detector solenoid neutron absorber control section assembly", TD drawing number 3973.330 – ME – 484251

[3] R.Bossert, "WBS 5.10 – Detector Support and Installation System", Mu2e-docDB-1383

[4] G.Gallo, M.Battista, "Mu2e – Magnets detector solenoid neutron absorber control section assembly – Beam-J top reinforced", TD drawing number 3973.330 – MC – 484397

[5] T.Page, D.Arnold, "Mu2e-infrastructure detector hall layout. Solenoid area locational layout", TD drawing number 3973.210-ME-