VICTR: Vertically Integrated CMS Tracker ASIC Circuit Tests using FPGA

Fermilab Summer Internship

Riccardo Cipriani

Supervisor : Ron Lipton

Fermilab

Outline

- Introduction
- General Background
- First Part – Learning LabVIEW
- Second Part – Design of Circuit tests using LabVIEW
- Third Part – Test of chip
- Conclusions

Introduction

- First Part : I learned the use of the LabVIEW Software.
- Second Part : I did the design of interface for testing using LabVIEW Software.
- Third Part : I did tests on chips.

Background

Level 1 trigger is necessary at CMS Tracker.

•This trigger must identify tracks from particles with transverse momenta (Pt) above 2GeV for data transfer.

•It must identify high particles with high Pt above 15 – 25 GeV.

•It must provide a Z resolution of approximately 1mm for tracks above 2 GeV.

Background

- Solution: searching for coincident hits in different detectors held apart by a fixed distance.
- A pair of concentric barrels are placed around the interaction region.
- A track that passes as shown in the figure would appear as four coincident hits on each of the pairs of blue and green detectors.
- From this set of coincident hits, the curvature of the track can be determined.
- From the curvature, the transverse momentum can be extrapolated.

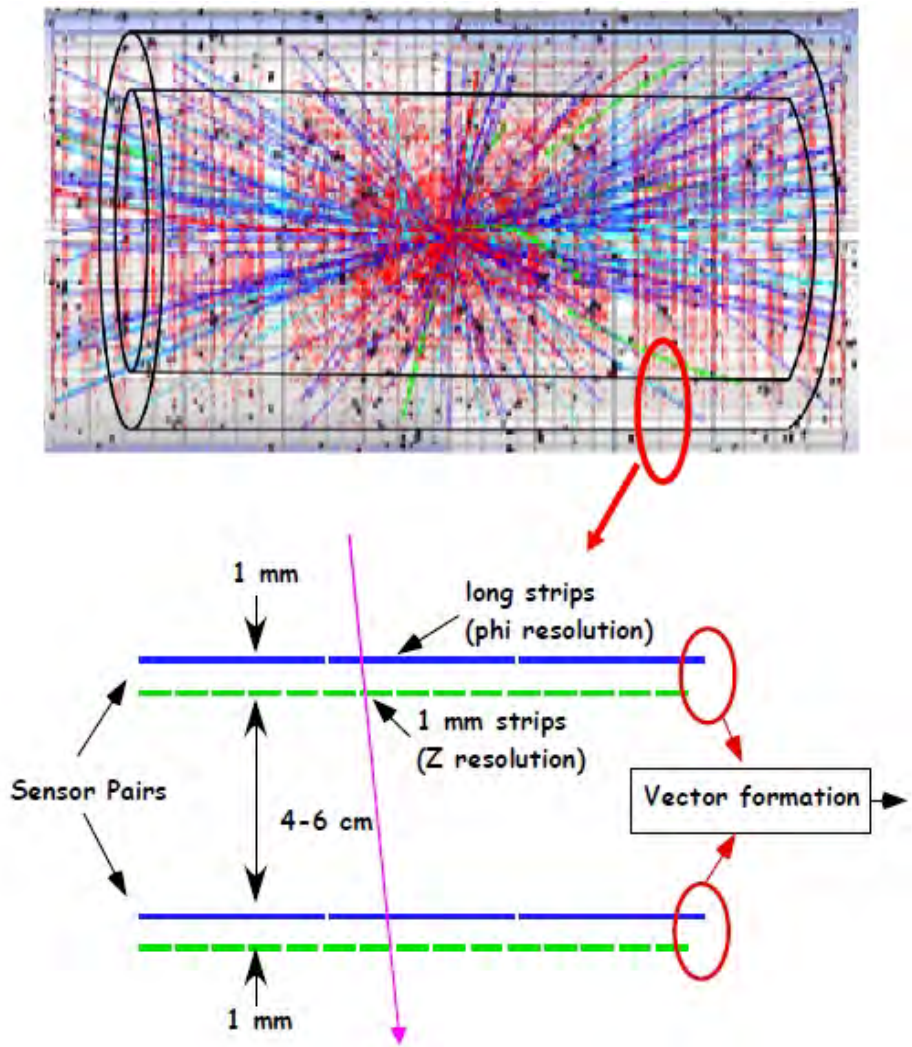

VICTR Concept

- VICTR is a two-tiered 3D integrated circuit.
- VICTR connected to two different detectors at the same time, the phi-strips ,an interposer and z-strips
- Each strip is designed to accommodate 64 phi strips and 320 z strips. (1:5)
- All of the signals are amplified, shaped and discriminated; coincidences are determined
- Data are serialized and read out.
- Vertical information flow from outer to inner stack Layers.

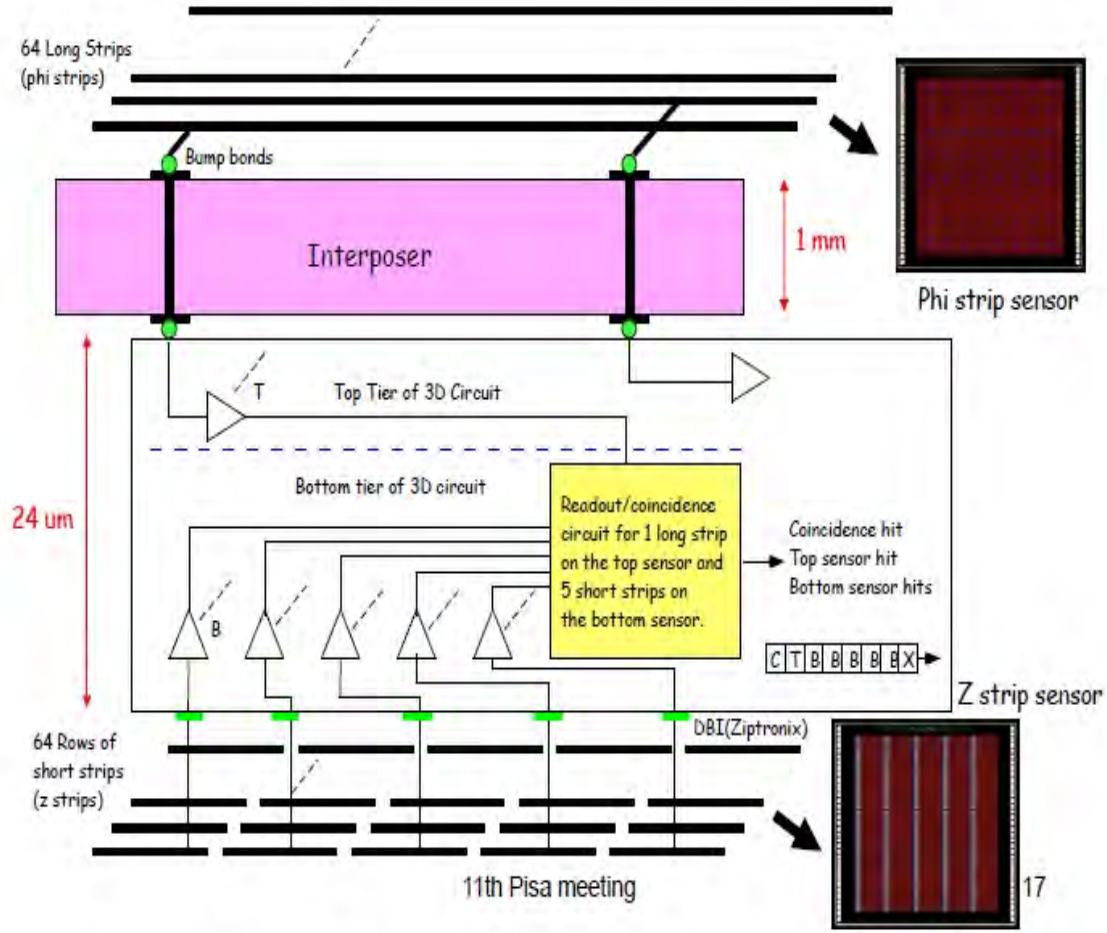

VICTR Target

- **The objective of the VICTR chip is to determine coincidences between hits on the phi strips and their associated Z strips.**
- It converts strip hits into digital pulses.
- A readout architecture to output the data.
- The objective :separate low-momentum tracks from high-momentum tracks.
- The chip is capable of outputting : hits on Z, hits on Phi, Coincidence.

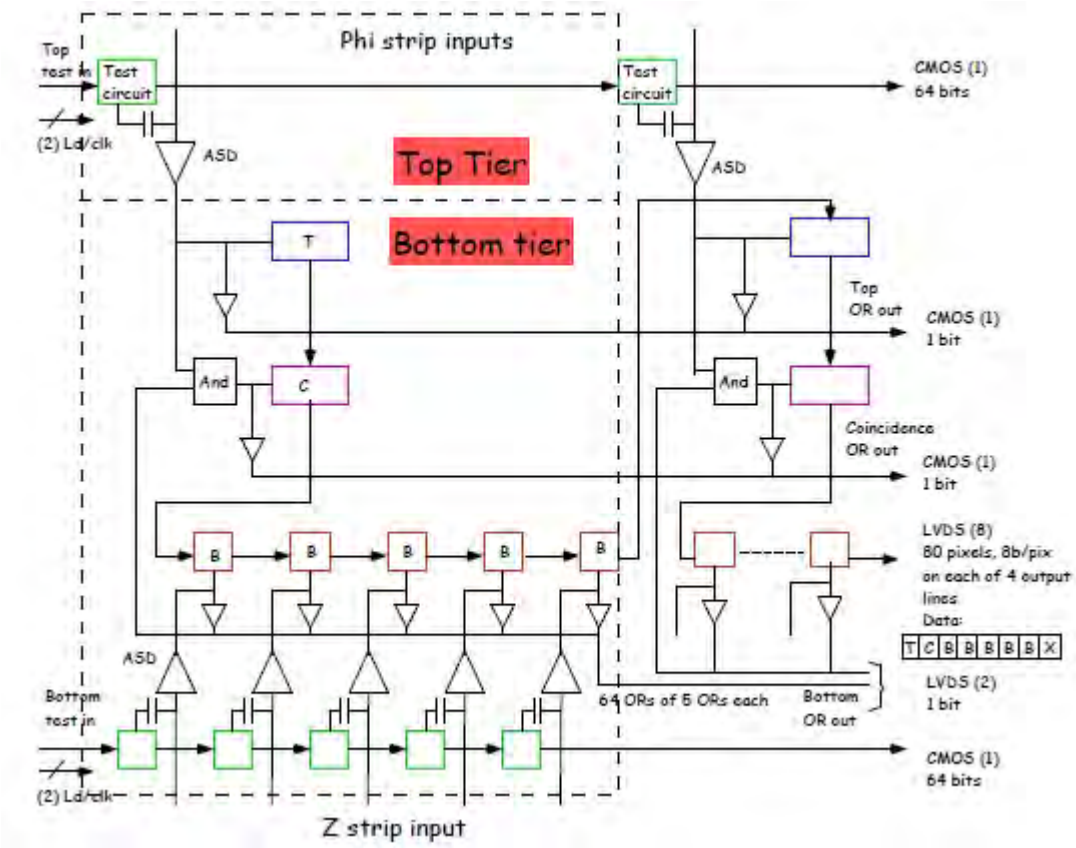

Readout Architecture

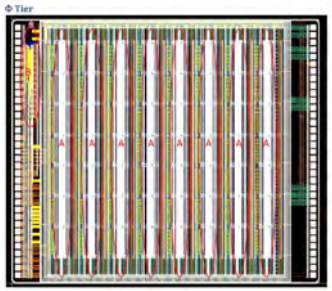

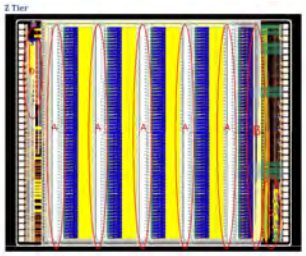

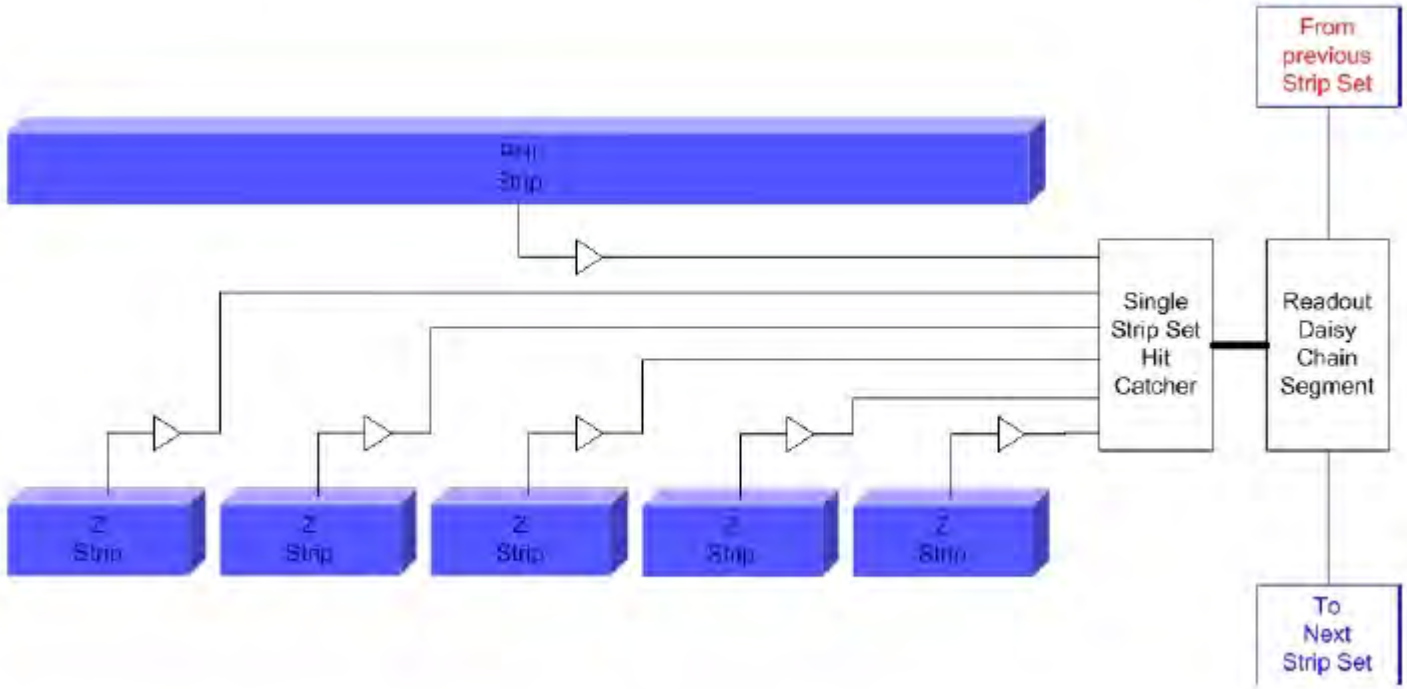

- receives the hits on Z strips.
- receives the hits on Phi strips.
- Determines if a Phi hit is coincident with any of 5 Z hits.

VICTR Tests

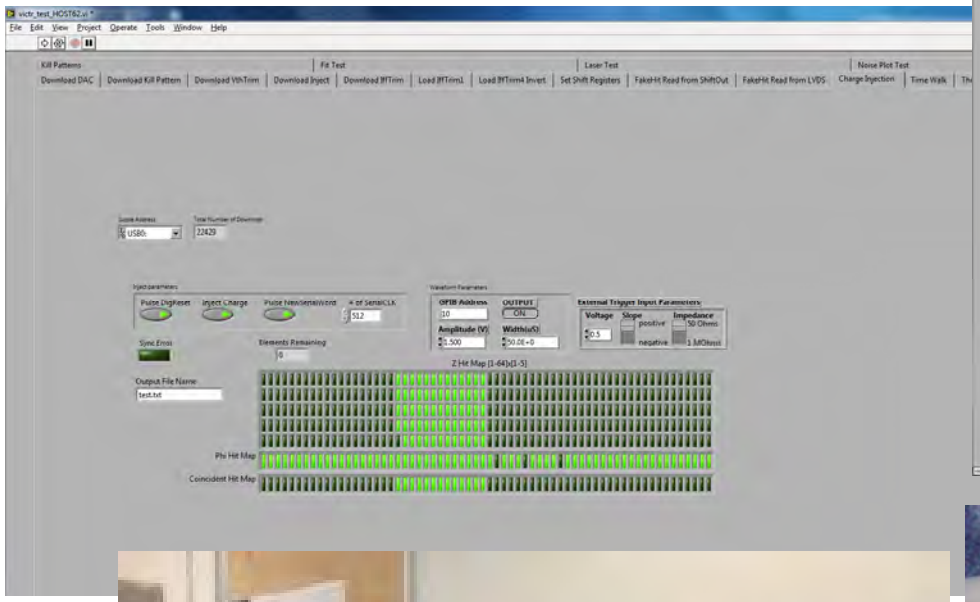

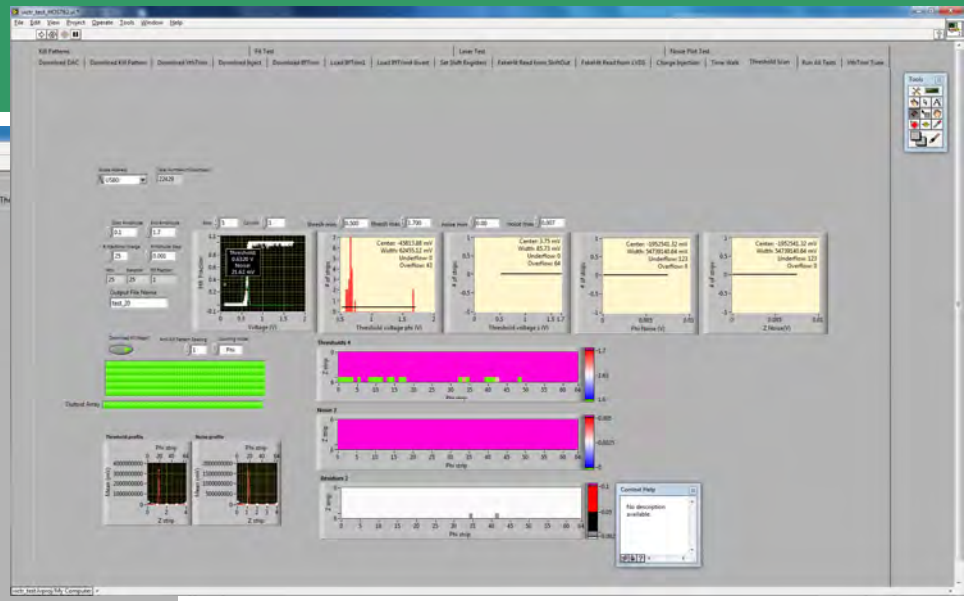

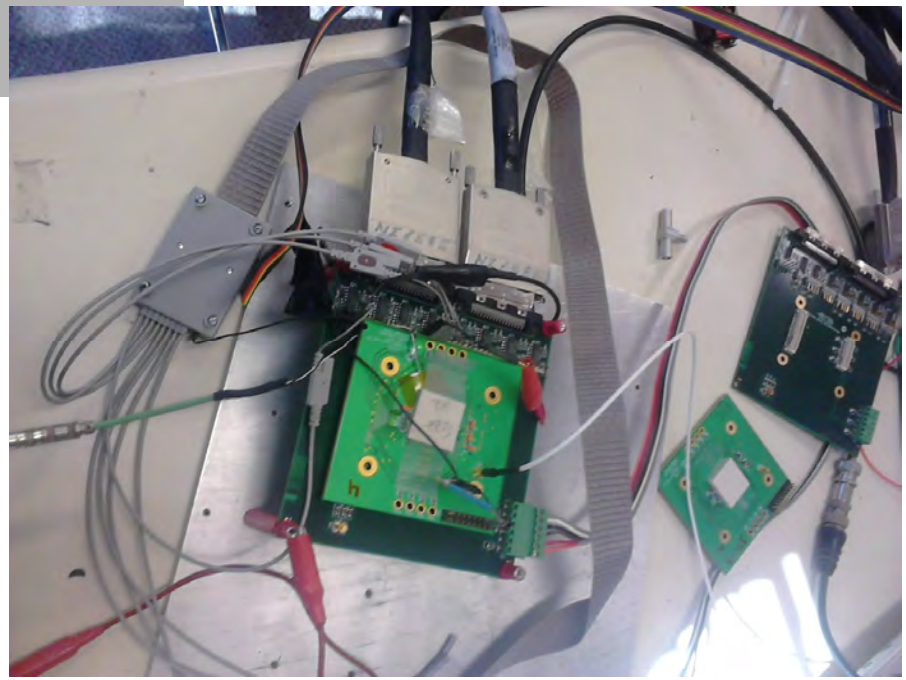

Waveform Parameters (1)

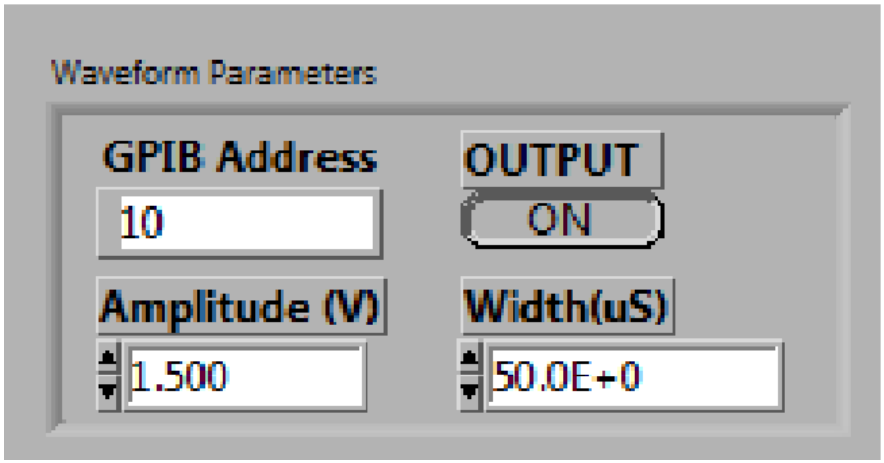

- Using Labview.
- Front Panel to control the Waveform Generator.
- Block Diagram to program Waveform generator output.

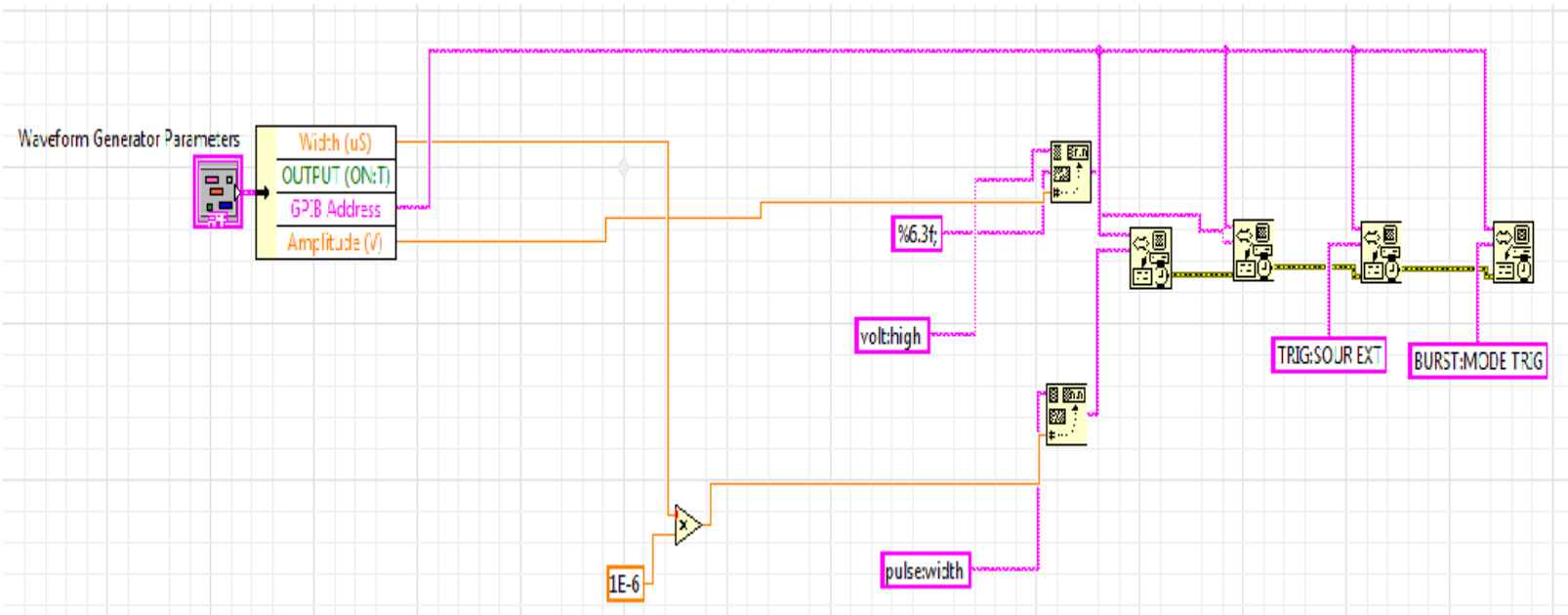

Waveform Parameters (2)

SIGNAL TEST:

- Pulse of 50 us
- Amplitude 1 - 2V
- External trigger

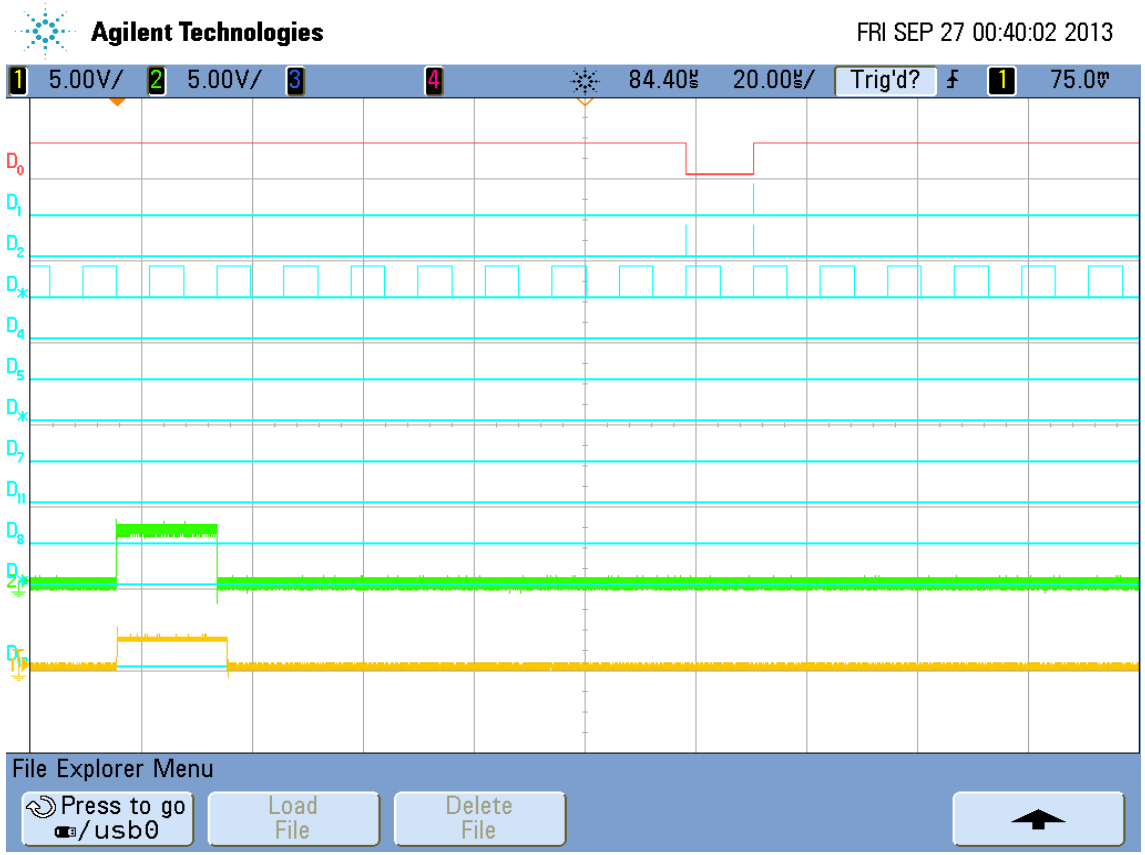

Threashold Scan (1)

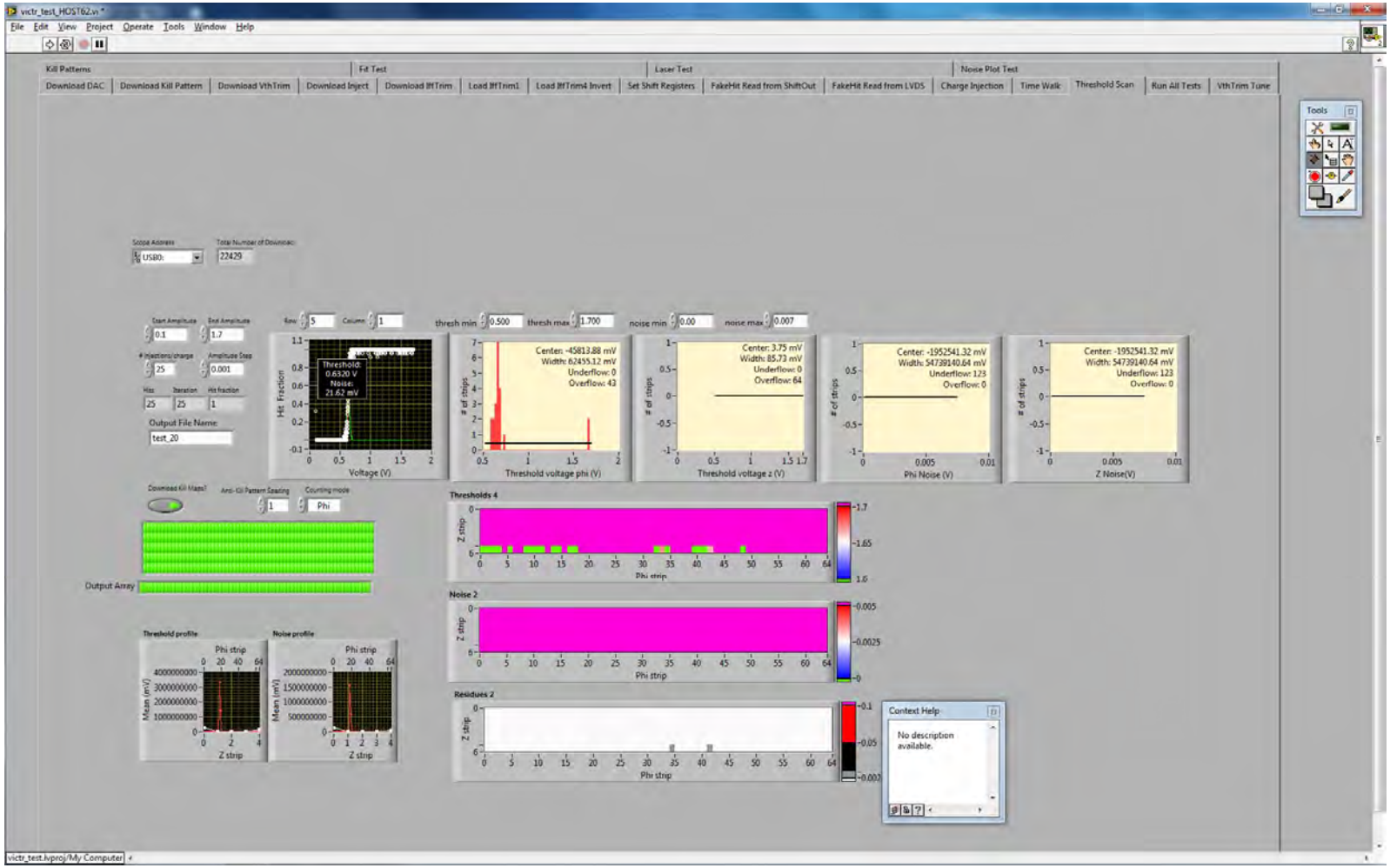

Threashold Scan (2)

Front Panel

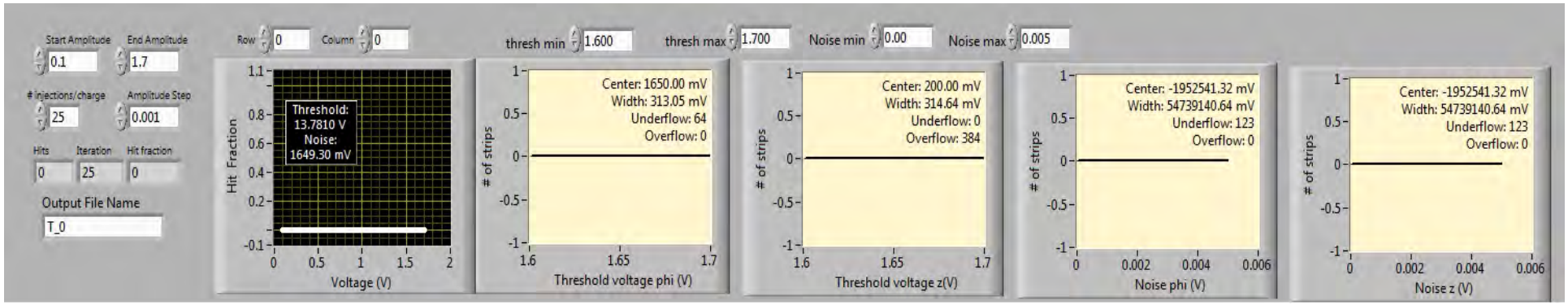

- Plot of Threashold z and Phi strips.
- Plot of Noise z and Phi strips.
- Hit fraction vs. Voltage.
- Output file name.
- Other setting parameters (as threashold and noise range).

Threashold Scan (3)

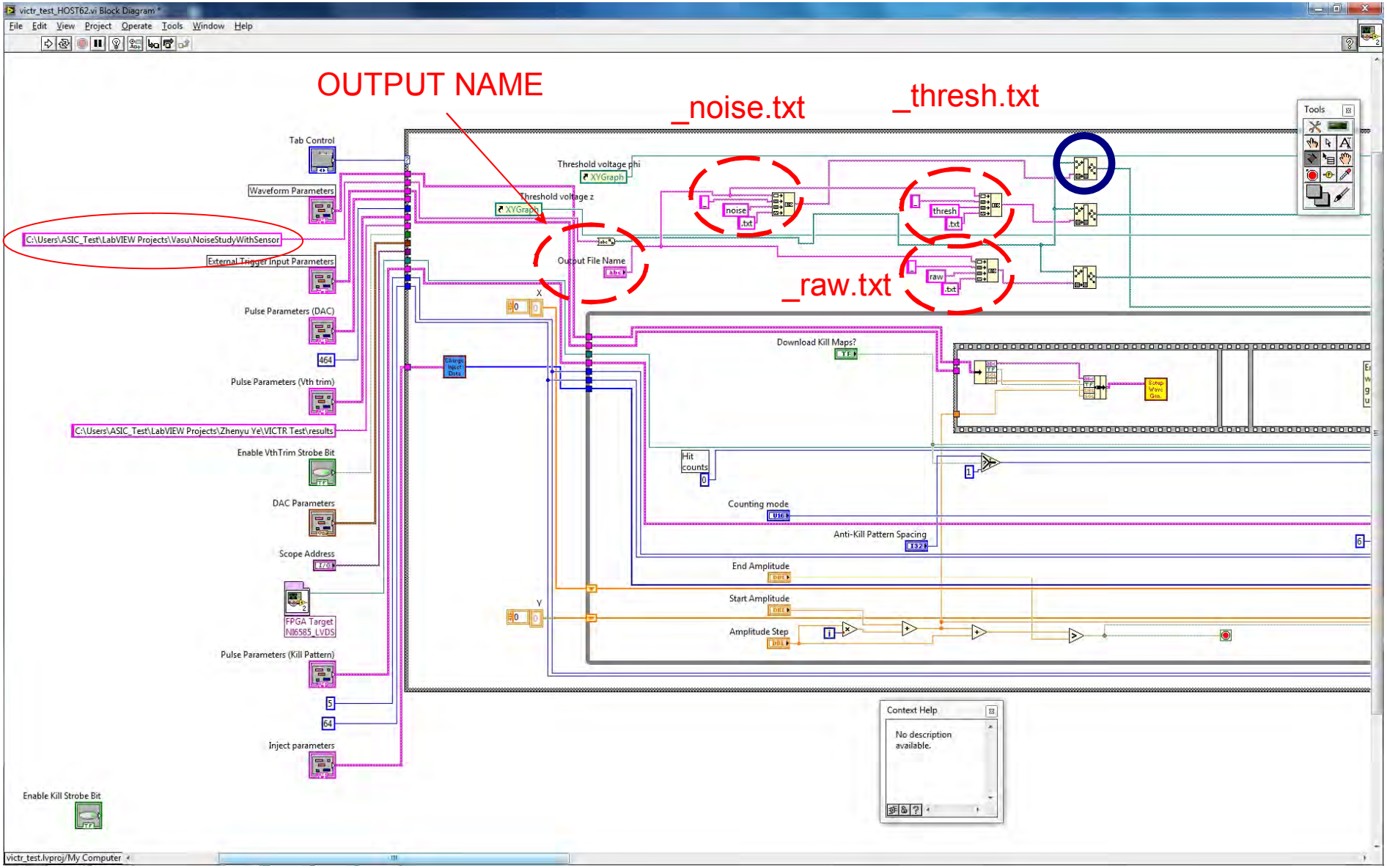

Threashold Scan (4)

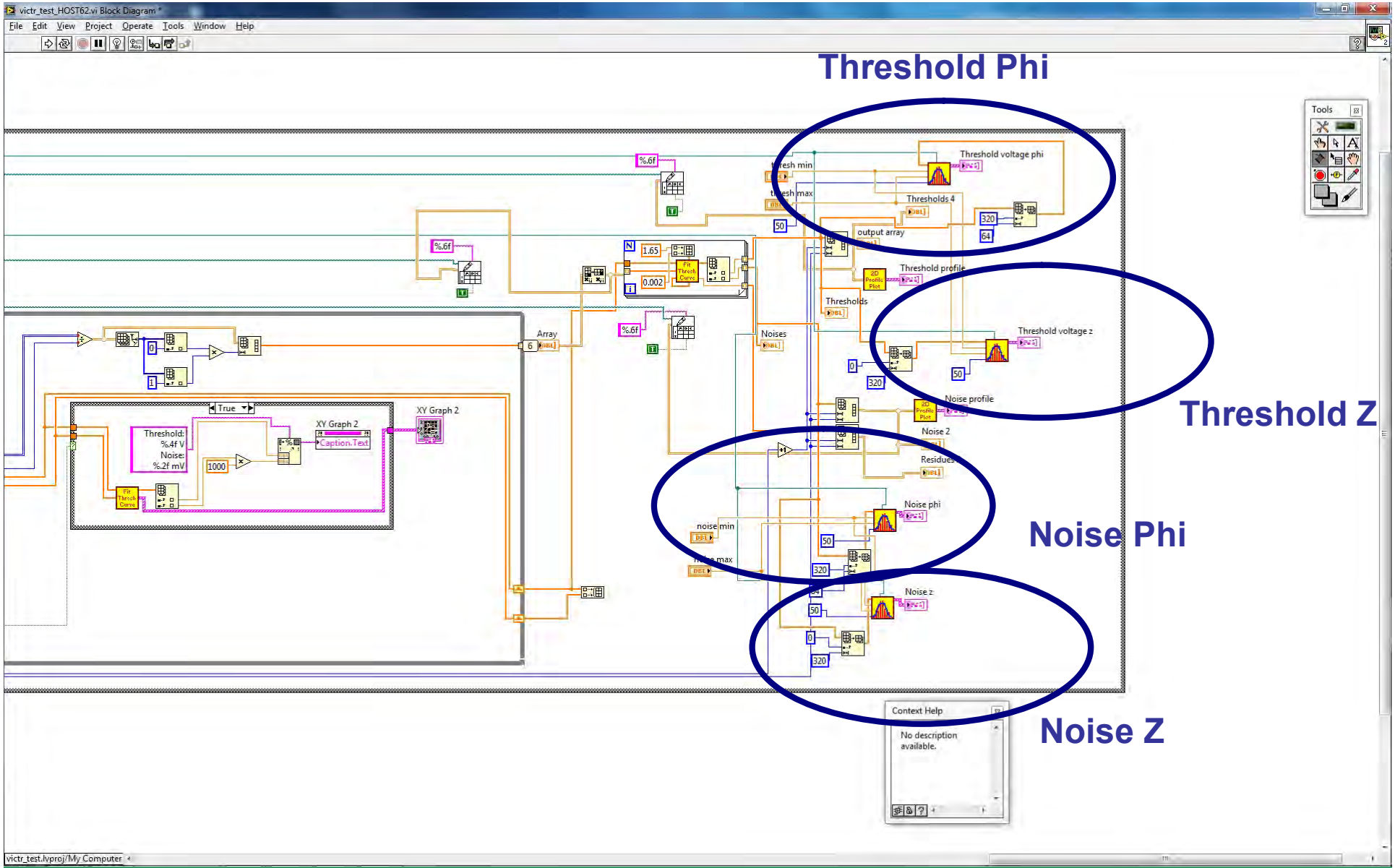

VICTR Tests (2)

- Tension Sweep in a range 0-20 V
- Threashold sweep in a range 1.6- 1.7 V
- Noise sweep up to 0.0005 V
- # injection/charge 25
- Amplitude in a range 1.1-1.7 V with step 0.001

We have measured:
- Noise
- Threashold

VICTR Tests Results (1)

Noise

	0	5	10	15	20
1	0,022699	0,023067	0,024341	0,024341	0,027279
2	0,017878	0,019111	0,019267	0,019267	0,021624
3	0,018017	0,019961	0,020845	0,020845	0,022923
4	0,021213	0,022305	0,018513	0,018513	0,023939
6	0,031047	0,03214	0,032718	0,032718	0,039107
9	0,031412	0,035096	0,038958	0,038958	0,038679
10	0,018607	0,018045	0,019548	0,019548	0,021524
11	0,020313	0,021131	0,026325	0,026325	0,02688
12	0,023665	0,022627	0,028178	0,028178	0,028274
14	0,021431	0,022178	0,030203	0,030203	0,029609
15	0,020125	0,020516	0,02727	0,02727	0,02725
17	0,021185	0,02234	0,025622	0,025622	0,024606
18	0,026926	0,026655	0,032529	0,032529	0,031028
33	0,022582	0,027503	0,026933	0,026933	0,027614
41	0,019863	0,02055	0,023403	0,023403	0,026203
49	0,018135	0,017517	0,024558	0,024558	0,025139

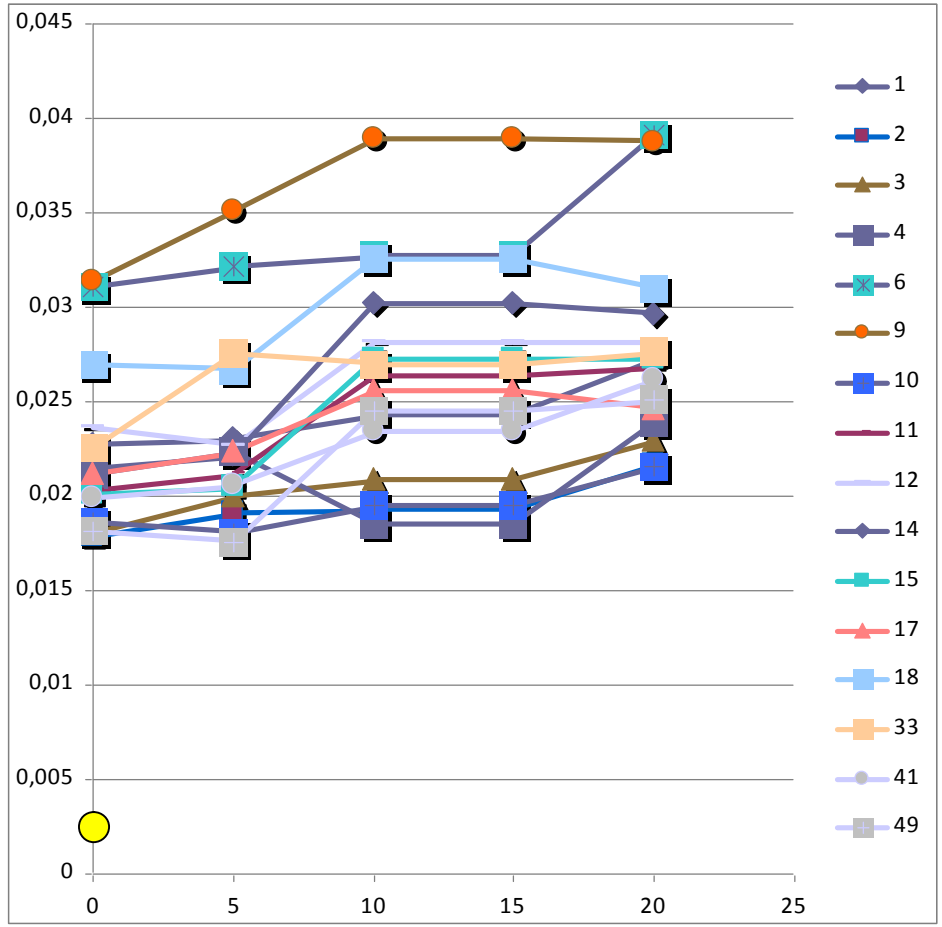

Noise Value without sensor @ 0V

VICTR Tests Results (2)

Threashold

	0V	5V	10V	15V	20V
1	0.647230	0.644043	0.636185	0.627918	0.627599
2	0.649763	0.647992	0.640646	0.632795	0.631963
3	0.651159	0.649548	0.641003	0.633133	0.632348
4	0.633122	0.631542	0.622504	0.615727	0.613760
6	0.633702	0.630375	0.617165	0.608710	0.606876
9	0.712901	0.707640	0.697130	0.690335	0.687736
10	0.661175	0.660040	0.652793	0.646018	0.645606
11	0.677642	0.675056	0.666507	0.659210	0.658698
12	0.675764	0.674182	0.664080	0.656278	0.655508
14	0.696584	0.694711	0.683247	0.675785	0.674584
15	0.685903	0.683264	0.674157	0.667912	0.665350
17	0.711527	0.706997	0.700211	0.693022	0.691583
18	0.683708	0.679289	0.670424	0.661896	0.664149
33	0.749860	0.746496	0.734605	0.729700	0.727726
41	0.672404	0.670961	0.662533	0.654101	0.652236
49	0.697399	0.693324	0.680666	0.673559	0.670732

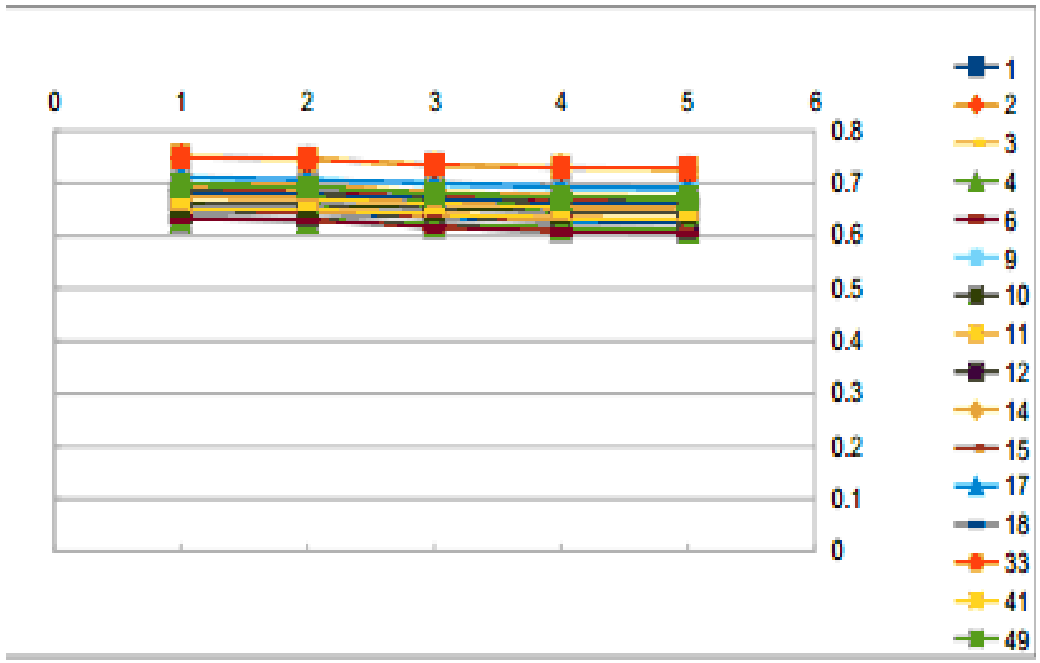

VICTR Tests Results (3)

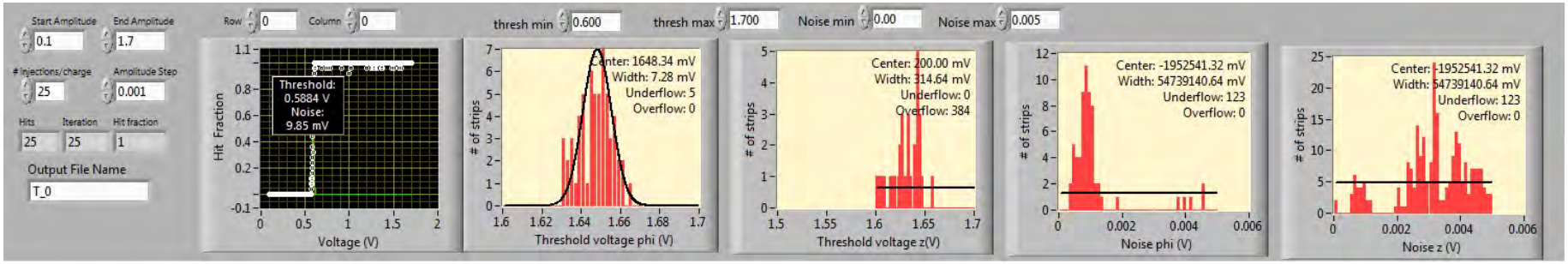

- Threshold Voltage Phi : 1.65 V
- Threashold Voltage Z : 1.64 – 1.65 V
- Noise Voltage Phi : 0.001 V
- Noise Voltage Z : 0.003 V

Conclusion

- First Part : I learned the use of the LabVIEW Software.
- Second Part : I did the design of interface for testing using LabVIEW Software.
- Third Part : I did tests on chips.

Thank You for attention.
Thank to the Supervisor Ron Lipton.
Thanks to Fermilab and INFN for the internship.

Backup

Double Stack Concept

- A stack consists of 2 detectors separated radially by about 1 mm.
- A Double stack consists of two stack separated by 4 cm.

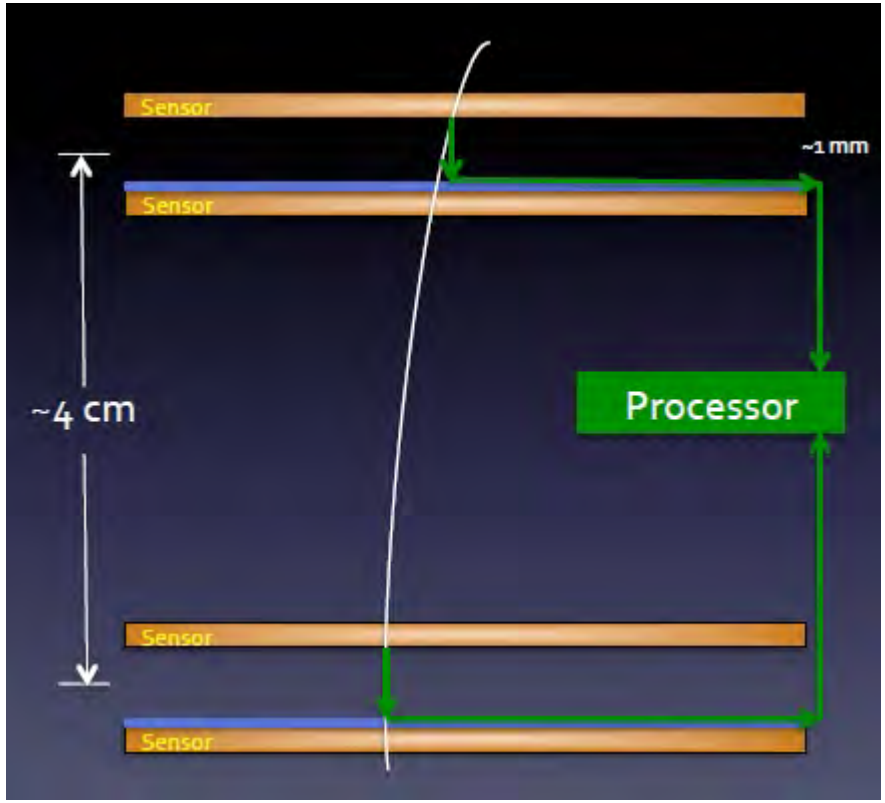

Vertically Interconnected Stack

- Vertical information flow from outer to inner stack Layers.
- Readout chip (ROIC) connected to inner sensor.
- Low mass interposer
  – transmits analog signals from upper sensor.
  – bump bond connections
- Through Silicon Vias used to connect ROIC to bonding pads,

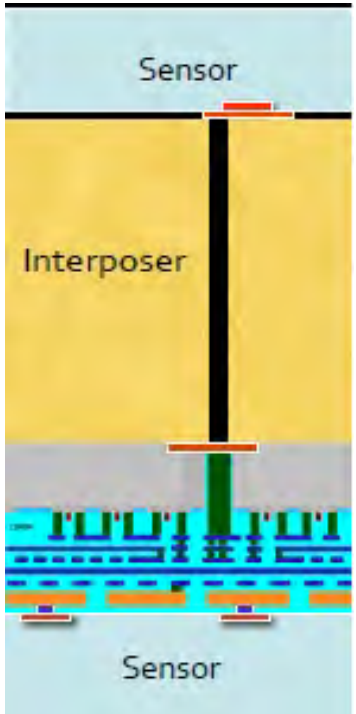

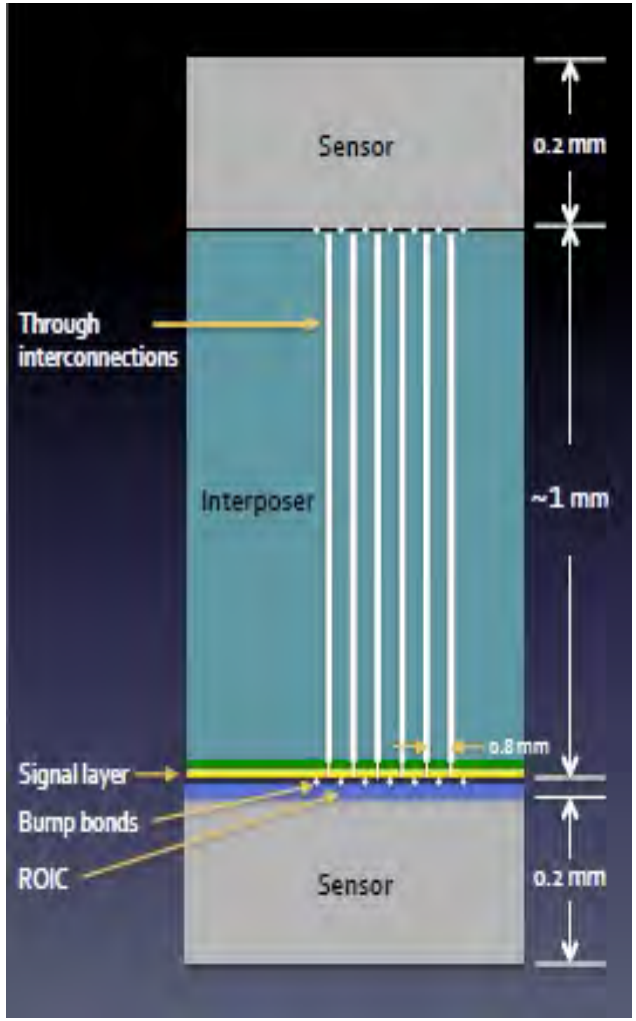

Readout Architecture (2)

It is composed of an Amplifier-Shaper-Discriminator and a daisy chain segment. Depending on how the control signals hitld, S1, and S0 are configured, data can be downloaded to or uploaded from the front ends.

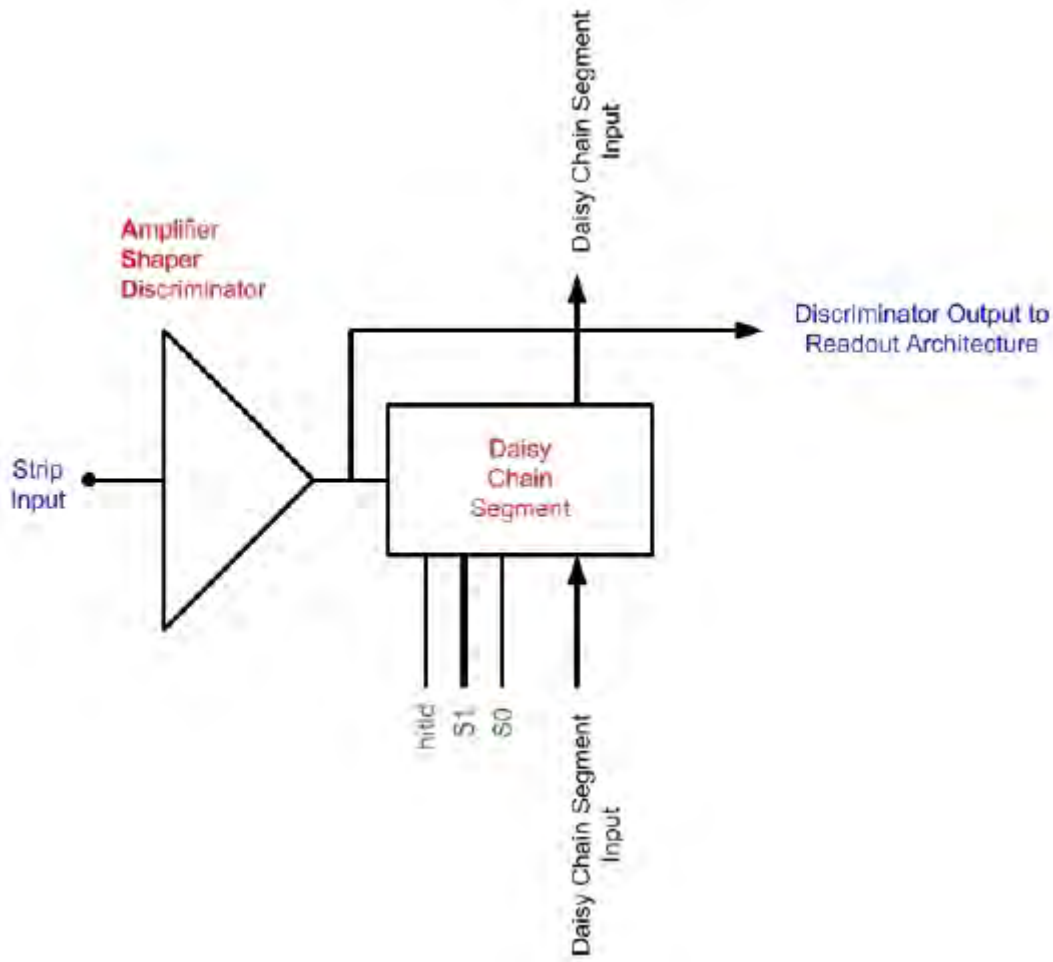

Threshold

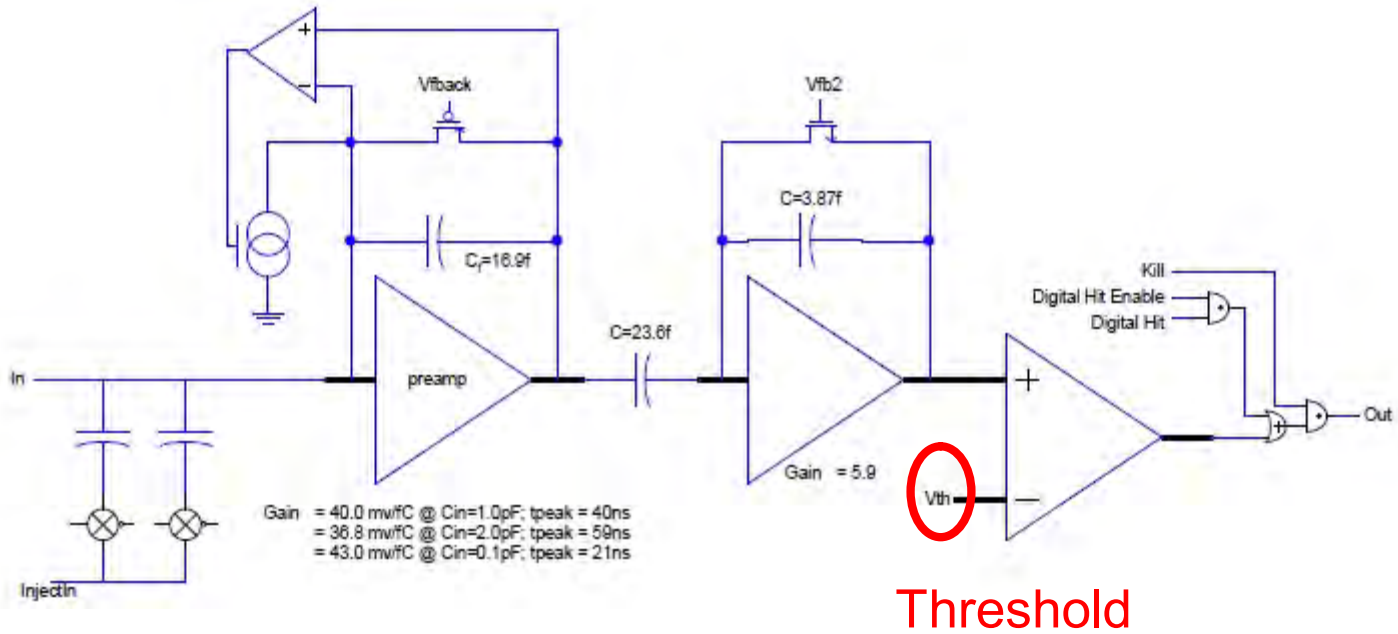
Vfback
Vfb2
C=3.87f
C_f=16.9f
C=23.6f
Kill
Digital Hit Enable
Digital Hit
In
preamp
Out
Gain = 5.9
Vth
Gain = 40.0 mv/fC @ Cin=1.0pF; tpeak = 40ns
= 36.8 mv/fC @ Cin=2.0pF; tpeak = 59ns
= 43.0 mv/fC @ Cin=0.1pF; tpeak = 21ns
InjectIn
Threshold